TITLE: "C"/TRAP/460/MET/RES/CONN	DRAWING NUMBER: MPM1140CTJ7G1N

REVISIONS

REV.	DESCRIPTION	DATE	APPD.
	PRELIMINARY	4/13/00	AJS

MOTOR DATA @ 460 VAC (TRAP)

MOTOR PARAMETERS		UNITS	VALUE
HORSEPOWER	HP RATED	Hp	1.3
KILOWATTS	KW RATED	KW	1.0
MAX OPERATING SPEED	N MAX	RPM	3800
SPEED @ RATED TORQUE	N RATED	RPM	3000
* CONTINUOUS RATED TORQUE @ 3000 RPM		IN-LBS[Nm]	28.0[3.2]
* CONTINUOUS STALL TORQUE		IN-LBS[Nm]	38.0[4.3]
CONTINUOUS LINE CURRENT		AMPS	3.0
PEAK TORQUE	Tpk	IN-LBS[Nm]	114.0[12.9]
PEAK CURRENT		AMPS	9.0
MAX THEORETICAL ACCEL		RAD/SEC²	60,000
TORQUE SENSITIVITY	Kt	IN-LBS/AMP[Nm/AMP]	12.4[1.40]
BACK EMF (LINE TO LINE)	±10%	Vrms/Krpm	110.0
D.C. RESISTANCE (P-P)	±10%	OHMS	12.0
INDUCTANCE (P-P)	±10%	MILLIHENRIES	64.0
ROTOR INERTIA	Jm	IN-LBS-SEC²[Kg-M²]	.0019[.00021]
STATIC FRICTION	Tf	IN-LBS[Nm]	.8[.09]

*25°C AMBIENT WITH A MAXIMUM CASE TEMPERATURE OF 100°C ON MOTOR. MOTOR MOUNTED ON A 12" X 12" X 1/2" ALUMINUM HEATSINK. THERMOSTAT IN STATOR WINDINGS WILL OPEN IF WINDING TEMPERATURE EXCEEDS 155°C. THIS ALLOWS FOR AN APPROXIMATE +10% HEADROOM IN THE CONTINUOUS TORQUE RATING BEFORE THERMOSTAT OPENS.

MECHANICAL NOTES:
1. AXIAL LOAD: 50 LBS MAX
2. RADIAL LOAD: 100 LBS MAX @ 1" FROM FACE
3. MOTOR SEALED TO IP65.
4. MOTOR WEIGHT: 13.2 LBS. [6.0 Kg]
5. MOTOR FINISH: BLACK EPOXY
6. MOTOR OUTPUT SHAFT: STAINLESS STEEL
7. MILLIMETERS (INCHES)

CONNECTION CHART

MOTOR CONNECTOR:
PT02E-14-5P(027)
(270-00026)

MOTOR WIRE LEADS		
PIN	WIRE FUNCTION	WIRE COLOR
A	ΦR	RED
B	ΦS	BLACK
C	ΦT	BLUE
D	PE GND	GRN/YEL
E	–	–

RESOLVER/THERM CONNECTOR:
PT02E-14-18P(027)
(270-00024)

RES/THERM WIRE LEADS		
PIN	WIRE FUNCTION	WIRE COLOR
U	THERM	BLACK
N	THERM	BLACK
H	SIN	YELLOW
G	COS GND	BLACK
S	COS	RED
F	SIN GND	BLUE
R	REF GND	YEL/WHT
E	REF	RED/WHT
D	RES SHLD	GRN/YEL
P	GND	GRN/YEL
A	–	–
B	–	–
C	–	–
J	–	–
K	–	–
L	–	–
M	–	–
T	–	–

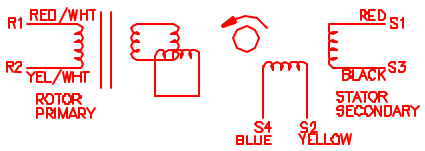

SCHEMATIC DRAWING FOR BRUSHLESS RESOLVER

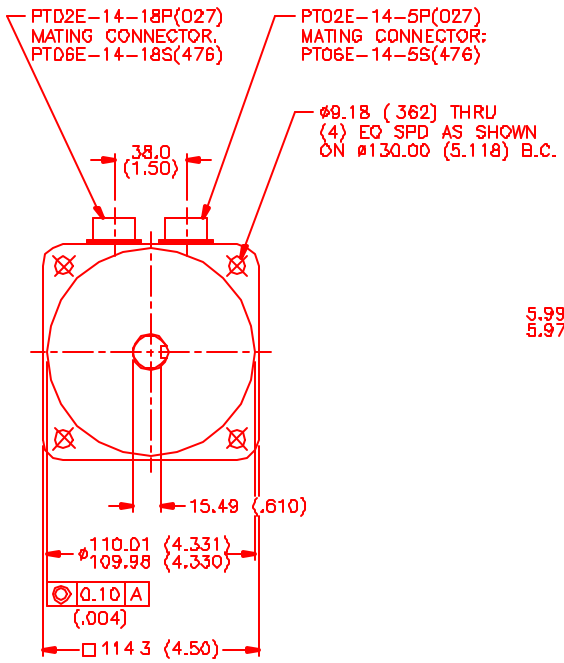

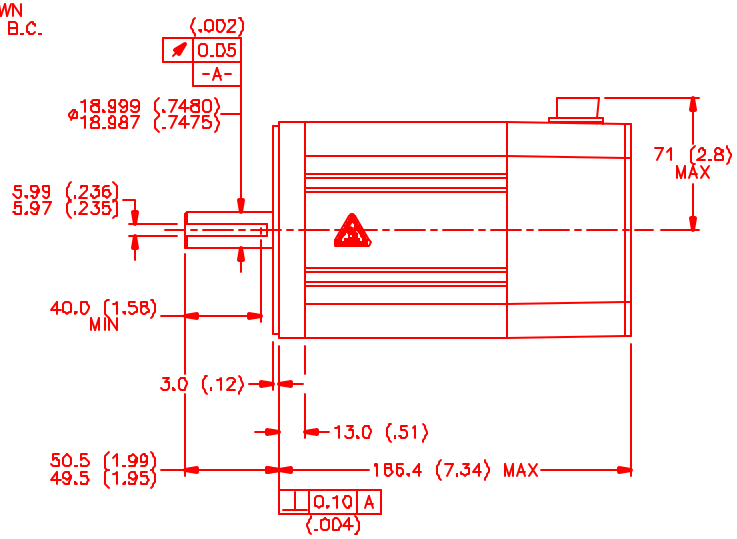

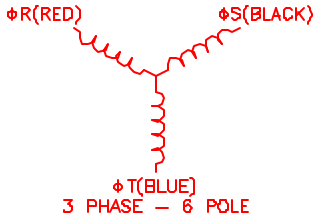

3 PHASE – 6 POLE

NO.	PART NUMBER	DESCRIPTION	QTY.

TOLERANCES UNLESS SPECIFIED: DECIMAL .XXX ± .005; DECIMAL .XX ± .010; DECIMAL .X ± .030; FRACTION ± 1/64; ANGLE ± 1/2°

MTS Systems Corporation
Automation Division

DRAWN AJS	TITLE "C"/TRAP/460/MET/RES/CONN	REV
DATE 4/13/00		
CHECKED	MATERIAL	
APPROVED	DRAWING NUMBER MPM1140CTJ7G1N	SCALE 1/2:1