Automation

p/n 88-017789-01 B

Gemini GT Hardware Installation Guide

Effective: December 17, 1999

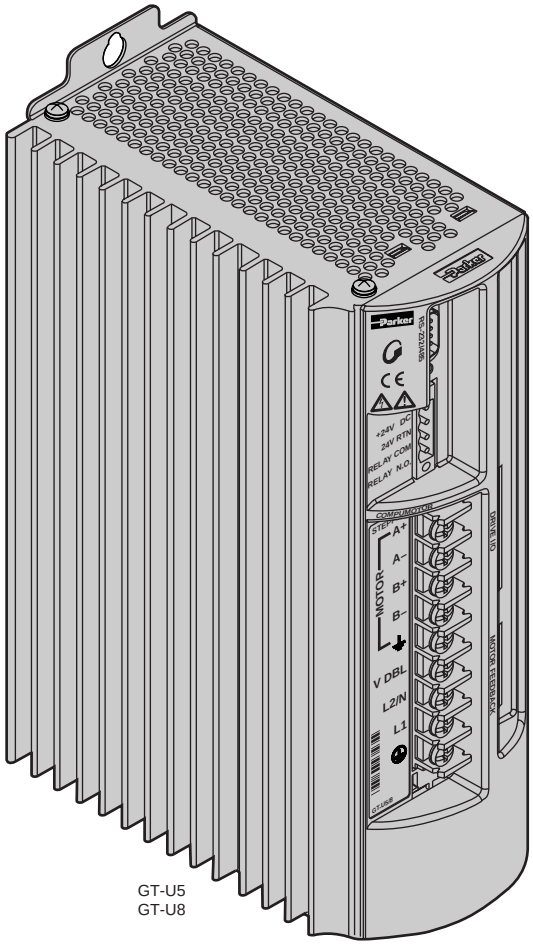

GT-U5
GT-U8

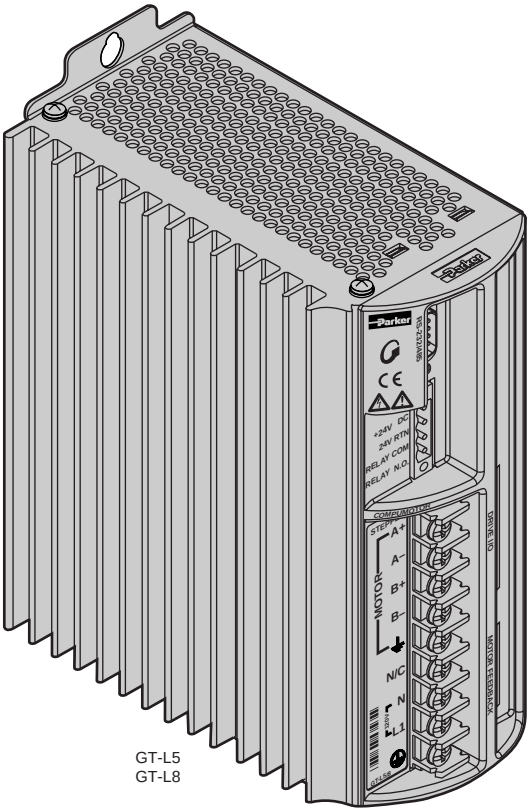

GT-L5
GT-L8

Gemini GT Series

Digital Stepper Drives

IMPORTANT

User Information

⚠ WARNING ⚠

Gemini Series products are used to control electrical and mechanical components of motion control systems. You should test your motion system for safety under all potential conditions. Failure to do so can result in damage to equipment and/or serious injury to personnel.

Gemini Series products and the information in this user guide are the proprietary property of Parker Hannifin Corporation or its licensers, and may not be copied, disclosed, or used for any purpose not expressly authorized by the owner thereof.

Since Parker Hannifin constantly strives to improve all of its products, we reserve the right to change this user guide and software and hardware mentioned therein at any time without notice.

In no event will the provider of the equipment be liable for any incidental, consequential, or special damages of any kind or nature whatsoever, including but not limited to lost profits arising from or in any way connected with the use of the equipment or this user guide.

© 1999, Parker Hannifin Corporation
All Rights Reserved

Motion Planner and Pocket Motion Planner are trademarks of Parker Hannifin Corporation.
Microsoft and MS-DOS are registered trademarks, and Windows, Visual Basic, and Visual C++ are trademarks of Microsoft Corporation.

Technical Assistance ⇨ *Contact your local automation technology center (ATC) or distributor,* ***or ...***

North America and Asia:
Compumotor Division of Parker Hannifin
5500 Business Park Drive
Rohnert Park, CA 94928
Telephone: (800) 358-9070 or (707) 584-7558
Fax: (707) 584-3793
FaxBack: (800) 936-6939 or (707) 586-8586
e-mail: tech_help@cmotor.com
Internet: http://www.compumotor.com

Europe *(non-German speaking)***:**
Parker Digiplan
21 Balena Close
Poole, Dorset
England BH17 7DX
Telephone: +44 (0)1202 69 9000
Fax: +44 (0)1202 69 5750

Germany, Austria, Switzerland:
HAUSER Elektronik GmbH
Postfach: 77607-1720
Robert-Bosch-Str. 22
D-77656 Offenburg
Telephone: +49 (0)781 509-0
Fax: +49 (0)781 509-176

Parker
Automation

Technical Support Email
tech_help@cmotor.com

Change Summary

Gemini GT Hardware Installation Guide

Revision B
December 17, 1999

The following is a summary of the primary technical changes to this document since the previous version was released.

This document, part number 88-017789-01**B**, supersedes 88-017789-01**A**.

DRFLVL Command Removed from Configuration Steps (page 21)

When you configure the drive, you no longer need to enter DRFLVLØ for the 6K to read and react to a GT fault.

RFS Command Recommended in Reconfiguration (page 19)

If you are reconfiguring a drive that has already been configured, we recommend that you first issue an RFS command (Return to Factory Settings) to the drive, before you begin the configuration procedure on page 19.

Product Type : Gemini Family of Drives, GTn and GVn

Including, but not limited to :

GT(6)-L5, GT(6)-L8, GT(6)-U5, GT(6)-U8

GV(6)-L3, GV(6)-U3, GV(6)-U6, GV(6)-U12

When installed in accordance with this installation guide, the above products have been demonstrated to be in compliance with the requirements of directives

- 89/336/EEC Electromagnetic Compatibility Directive as amended by Directive 92/31/EEC

These products are intended for use in Commercial, Light Industrial and Industrial Environments as defined in the relevant EMC standards.

These products are compliant with the Low Voltage Directive.

- 73/23/EEC Low Voltage Directive
- 93/68/EEC CE Marking Directive

Symbols:

Protective Earth Connection

Earth (Ground) Terminal

Shield, Frame, or Chassis Terminal

Caution, Risk of Electrical Shock

Caution, Refer to Accompanying Documentation

Table of Contents

Chapter 1 – Introduction **7**
Gemini Products—Overview 8
Compatible Compumotor Products 10

Chapter 2 – Installation **11**
Checking Your Shipment 12
"Express Setup" Overview 12
Step 1 – Connecting the Motor 15
Step 2 – Connecting AC Power 16
Step 3 – Configuring the Drive 18
Step 4 – Connecting the 6K Controller 20
What's Next? 22

Chapter 3 – Configuration **23**
Configuration 24
- Motor Settings 24
- System Settings 25
- Input/Output (I/O) Settings 25
- Communications Settings 26
- Motor Control Settings 26

Procedure for Configuring Advanced Features 27
- Configuring Damping Settings 27
- Configuring Stall Detect Settings 29

Procedure for Motor Matching 30

Chapter 4 – Special Features **33**
Relay Connections (optional) 34
+24VDC "Keep Alive" Power Connections (optional) 34
Multiple Drive Installations 35
RS-232/485 Communications 36
- Establishing Communications 36
- Configuring the Serial Port 37
- RS-232 Communications 37
- RS-232 Daisy-Chaining 38
- RS-485 Communications 39
- RS-485 Multi-Drop 40

Updating the Drive's Operating System 40

Chapter 5 – Troubleshooting **41**

Appendix A – Specifications **49**
Power Specifications 50
Interface/Communication 51
Inputs and Outputs 52
Dimensions 58
Protective Circuits 61
Cable Specifications 63

Appendix B – Using Non-Compumotor Motors **67**

Appendix C – Regulatory Compliance: UL and CE **75**

Index **81**

CHAPTER ONE

Introduction

IN THIS CHAPTER

- Gemini Product Overview
- Compatible Compumotor Products

Gemini Products—Overview

The Gemini Series is a *family* of high performance digital drives. The family contains drives for both stepper and servo motors. With many models and options available, the user can choose the precise level of power and control for the application's motion requirements.

Gemini Product Descriptions

Gemini GT and GV

Gemini GT Stepper Drives and GV Servo Drives are the basic Gemini products. They are controlled with standard command interfaces of step/direction or ±10V, and can be used with standard indexers or controllers.

The drives are configured over RS-232/485 with either Motion Planner on a personal computer (PC), or Pocket Motion Planner on a palm PC. Many advanced features are standard in the drives, such as sensorless stall detect and ABS damping in the GT, and digital tuning and notch filters in the GV.

Gemini GT6 and GV6

The Gemini GT6 and GV6 are controller/drives available with several different programming modes. These drives have basic motion control and sequencing capabilities, and can be used in distributed control applications. By using optional plug-in cards, they can be equipped with interfaces for SERCOS, Profibus, Interbus-S, and other industry standard fieldbus networks.

The GT6 and GV6 are configured and programmed over RS-232/485, either with Motion Planner on a PC, or Pocket Motion Planner on a palm PC.

GT6 or GV6 drives are also available with an optional SERCOS interface. These drives can be configured via the acyclic channels of the motion bus, or via the RS-232/485 port using the tools mentioned above.

Gemini GT6K and GV6K

The Gemini GT6K and GV6K are single axis packaged controller/drives that offer full 6K Series controller functionality and programmability for complex distributed control applications. Key features include: complex program capabilities such as math, variables, and logic control; flexible and expandable serial I/O modules; and Ethernet compatibility for PC bus access. The user programs these devices over an RS-232/485 communication port; a second port is available for use with a full-time operator interface.

Gemini Product Names

The following table lists the meanings of letters and numbers in Gemini product names. Notice that “T” is associated with step motor products (“sTep”), and “V” is associated with servo motor products (“serVo”).

Control Level:

Step Motor Drives and Drive/Indexers		Servo Motor Drives and Controller/Drives	
GT	Step Motor Drive	GV	Servo Motor Drive
GT6	6000-based Step Motor Indexer	GV6	6000-based Servo Controller
GT6K	6K-based Step Motor Indexer	GV6K	6K-based Servo Controller

Power Level:

Step Motor Power Levels		Servo Motor Drives and Controller/Drives	
L5	120VAC, 5A at 170VDC	L3	120VAC, 3A at 170VDC
L8	120VAC, 8A at 170VDC	U3	120/240VAC 1 Ø, 3A at 170/340VDC
U5	120/240VAC 1 Ø, 5A at 74VDC	U6	120/240VAC 1 Ø, 6A at 170/340VDC
U8	120/240VAC 1 Ø, 8A at 74VDC	U12	120/240VAC 1 Ø, 12A at 170/340VDC

Amperage values represent continuous current, peak of the sine wave.

“L” = “Low” voltage input (120VAC); “U” = “Universal” voltage input (120/240VAC)

Options:

Data Bus (-db) Option (for GT6 and GV6 only):

IS Interbus

PB Profibus

SC SERCOS

Feedback (-fb) Option (for Servos only):

E Encoder/Hall

R Resolver

Ship Kit Options:

NK No Kit

Format:

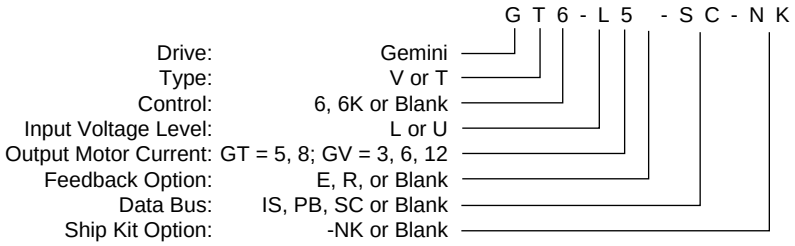

Format Example

Compatible Compumotor Products

GT-nn Stepper	6K or other Compumotor indexer	
GV-nnn Servo	±10V mode:	6K or other Compumotor controller
	Step/Direction mode:	6K or other Compumotor indexer
Software	Motion Planner	
	Pocket Motion Planner (version 1.2 or higher)	
	Note: Gemini drives are not compatible with ASCII communication programs such as Motion Architect or X Language software.	
Cables	See list in *Appendix A Specifications*.	
Motors	See information in the separate *Gemini Motor Reference Manual*.	

User Guides

The following items ship with the drive:

Gemini Quick Start Guide
Gemini Hardware Installation Guide
Gemini Programmer's Reference
Gemini Motor Reference Manual
Motion Planner CD-ROM

You can also order the drive only, with none of the above items. Specify the -*NK* option (“No Kit”).

Motor Information

Information about Compumotor motors is in the separate *Gemini Motor Reference Manual*.

CHAPTER TWO

Installation

IN THIS CHAPTER

- Checking Your Shipment
- Express Setup

Checking Your Shipment

Inspect your shipment carefully. You should have received one or more of the following:

Gemini Drives

GT-U5

GT-U8

GT-L5

GT-L8

Ship Kit Items

The following ship with the drive:

Part	Part Number
Gemini GT Quick Reference Guide	88-017777-01
Gemini GT Hardware Installation Guide	88-017789-01
Gemini Programmer's Reference	88-017778-01
Gemini Motor Reference Manual	88-017790-01
Motion Planner CD-ROM	95-017633-01

Options and Accessories

You may have ordered one or more of the following options or accessories.

Part	Part Number
Drive Only (no accompanying manuals)	-NK

Cables: various cables, breakout modules, etc., are available. See *Appendix A Specifications* for cable and accessory information.

Cable clamps, EMC filters, ferrites, etc., are available. See *Appendix C Regulatory Compliance* for part numbers and more information.

Motors

You may have ordered a motor from one of the following families of Compumotor motors:

O Series R Series T Series E Series*

*E Series motors are similar to S and ZETA Series motors. If you use one of these motors, during configuration select the same size E Series motor from the configuration software's menu.

"Express Setup" Overview

This chapter gives instructions for performing an *express setup*. The purpose of the express setup is to verify that the drive, cables, and motor work properly as a system. It will also verify serial communications and controller connections.

You will connect together only the components necessary to achieve basic motion—a drive, a motor (without a load connected), and a controller. You will use a computer to communicate with the drive, and with the controller.

In the express setup, we will give procedures for the following steps:

1. Connecting the motor to the drive (without a load connected)
2. Connecting AC power to the drive
3. Establishing communications and configuring the drive for autorun
4. Connecting a controller, enabling the drive, and observing the motor turn

Information you may need for final installation will be presented in *Chapter 3 Configuration*, in *Chapter 4 Special Features*, in *Appendix A Specifications*, and in the separate *Gemini Motor Reference Manual*.

The next drawing shows locations and names of the Gemini components that you will encounter during the installation procedure.

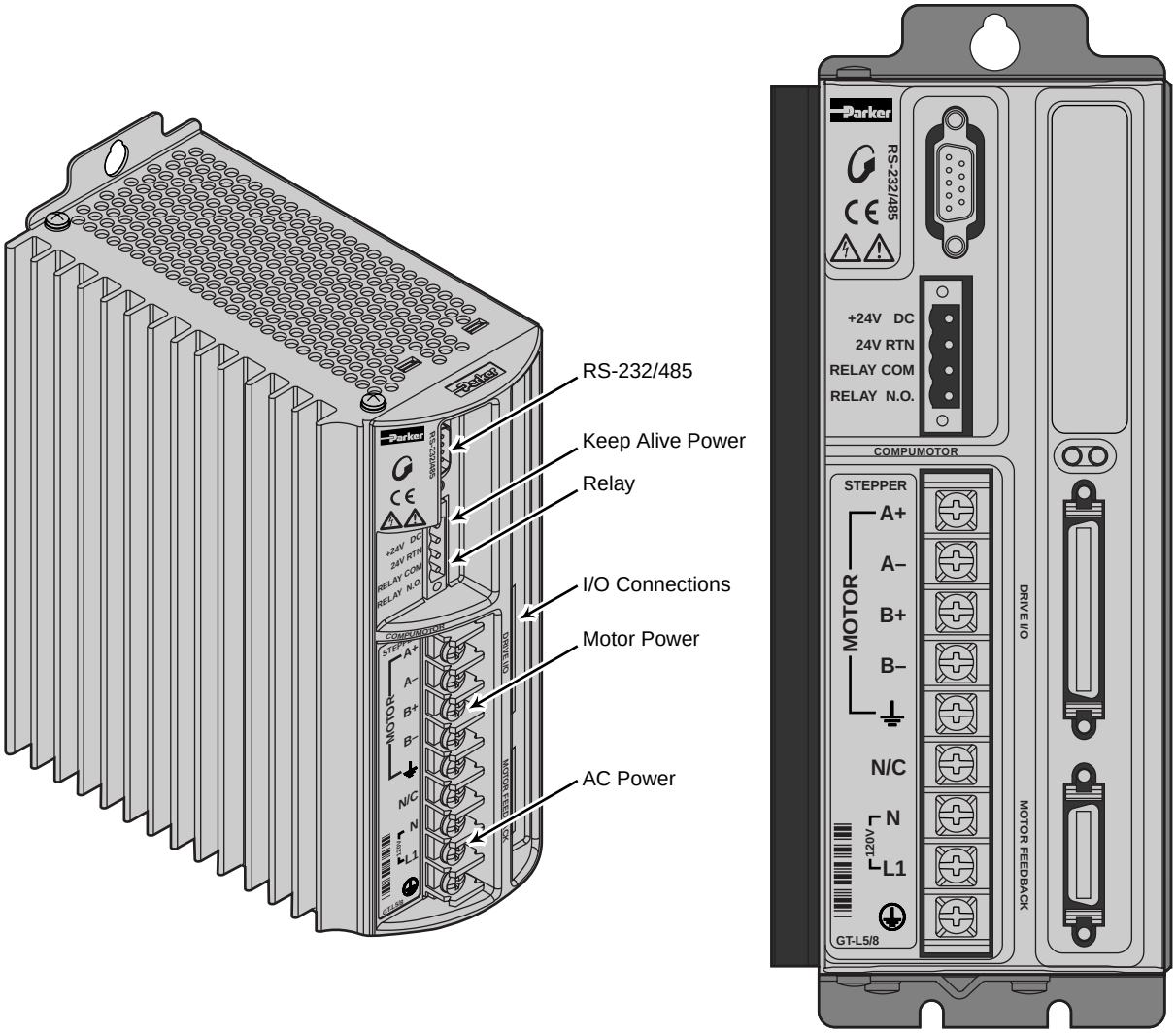

Component Locations

Illustrations in this Installation Guide

We will usually show the Gemini GT-L5 Drive in illustrations. Other Gemini drives have similar features. In cases where we need to illustrate *differences* between drives, we will show relevant drawings for each drive.

System Overview

In this express setup procedure, we will give instructions for a Compumotor system—Gemini drive with Compumotor motor, Compumotor cables, and Compumotor 6K controller.

If you use non-Compumotor equipment, try to follow along and perform the steps in the *Express Setup* procedure; consult *Appendix A Specifications* for additional information you may need.

The next drawing shows the components of a Compumotor system.

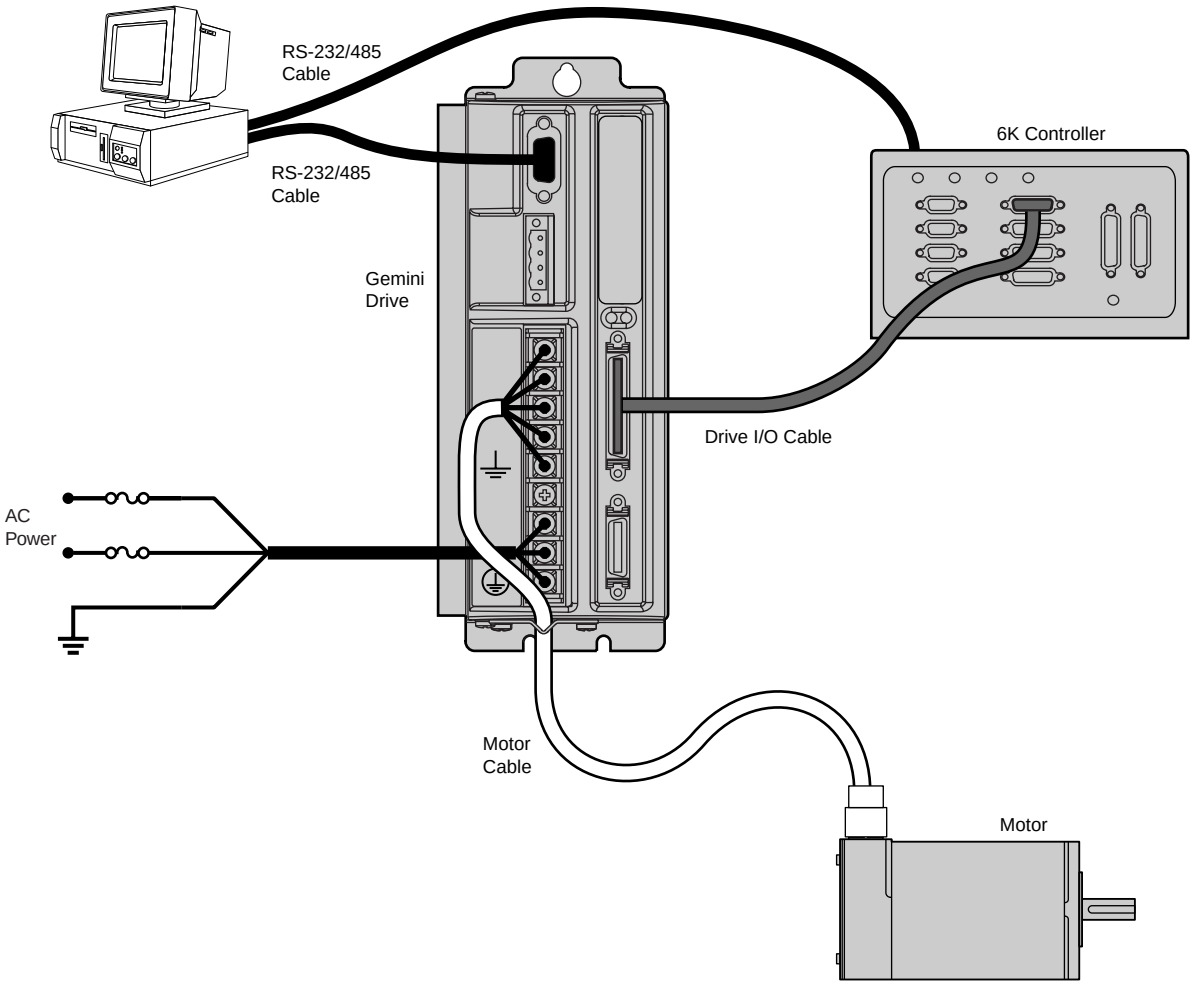

Compumotor System

If you use a Compumotor controller other than the 6K, see *Appendix A Specifications* for wiring instructions.

Step 1 – Connecting the Motor

The Gemini drive is compatible with 4, 6, or 8 lead step motors designed for use with a bipolar drive.

Connecting the Motor

Make sure power is off before you connect the motor.

1. Wire your motor in series or parallel.

   For wiring diagrams, color codes, dimensions and speed/torque curves for Compumotor motors, consult the separate *Gemini Motor Reference Manual*.

   If you use a non-Compumotor motor, see *Appendix B Using Non-Compumotor Motors* for instructions on preparing your motor for connection to the Gemini drive.
2. Prepare four motor phase wires to connect to the Gemini drive, and identify them as A+, A-, B+, and B-.
3. Remove the clear plastic cover from the drive terminals. Connect the motor cable's earth wire to the drive terminal with the ⏚ symbol. This connects the motor's protective conductor terminal to the drive's safety earth.
4. Connect your motor cable's phase wires (A+, A-, B+, B-) to the drive's A+, A-, B+, B- terminals, respectively, as shown in the drawing below.

WARNING

The drive's barrier strip terminals are at hazardous voltages when power is applied to the drive, and up to 30 seconds after power is removed. Reinstall the clear plastic terminal cover after you make connections.

5. Secure the motor cable to the drive by placing the exposed cable shield in the saddle clamp on the bottom of the drive. Make the loop of cable between the saddle clamp and the drive terminals as short as possible.
6. Clamp the motor securely in place during this *Express Setup* procedure, if your motor is not permanently mounted.

The next drawing illustrates these connections.

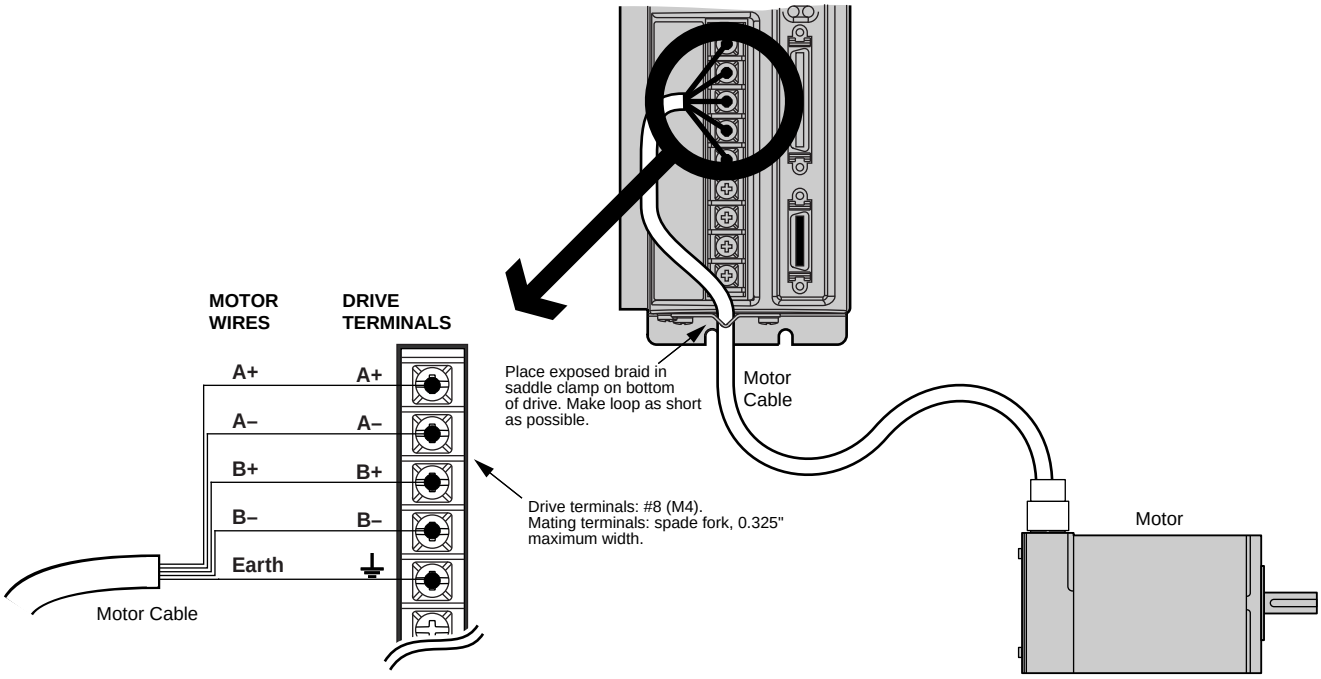

Motor Wiring – Typical

Step 2 – Connecting AC Power

GT-L5 and GT-L8 can be operated only at 120VAC.

GT-U5 and GT-U8 can be operated at 120VAC or single phase 240VAC.

Acceptable ranges of AC input voltage are listed below:

Drive	AC Input Range
GT-L5	95VAC – 132VAC
GT-L8	95VAC – 132VAC
GT-U5	95VAC – 132VAC and 190VAC – 264VAC
GT-U8	95VAC – 132VAC and 190VAC – 264VAC

CAUTION

You must connect V DBL to L2/N on GT-U5 and GT-U8 to enable the voltage doubler for 120VAC operation.

WARNING

You must connect the drive's protective conductor terminal, marked with the ⏚ symbol, to a reliable system safety earth. Make the connection directly, by means of a low impedance path less than or equal to 0.1 ohm (no fuses, etc.). Under normal operation, no current should flow through the safety earth connection.

WARNING

The drive's barrier strip terminals are at hazardous voltages when power is applied to the drive, and up to 30 seconds after power is removed. Reinstall the clear plastic terminal cover after you make connections.

Fuse Information

Gemini drives have no internal fuses. For safety, you must provide a fuse in each of the AC input lines. Recommended fuse types and sizes are:

GT-L5/GT-L8 (120VAC)	GT-U5/GT-U8 (120VAC)	GT-U5/GT-U8 (240VAC)
125VAC Time Delay	125VAC Time Delay	125VAC Time Delay
10 amp	10 amp	10 amp
Type RK5 or better	Type RK5 or better	Type RK5 or better

The next table lists part numbers for suitable fuses, from several manufacturers:

Amps:	Bussman:	Gould:	Littelfuse:	Grainger:
10	FRNR10	TR10R	FLNR10	1A693

GT-L5 and GT-L8 AC Power Connections

Connections are illustrated in the next drawing, on the left.

CAUTION

Do not operate GT-L5/8 above 132VAC, or the drive will be permanently damaged.

120VAC Operations:

1. Connect power system's safety earth to drive's protective conductor terminal, marked with the ⏚ symbol. Do not fuse the protective conductor terminal.
2. Connect 120VAC, 50/60 Hz, single phase power line to drive's L1 and N terminals.
3. **Reinstall the clear plastic terminal cover after you make connections**.

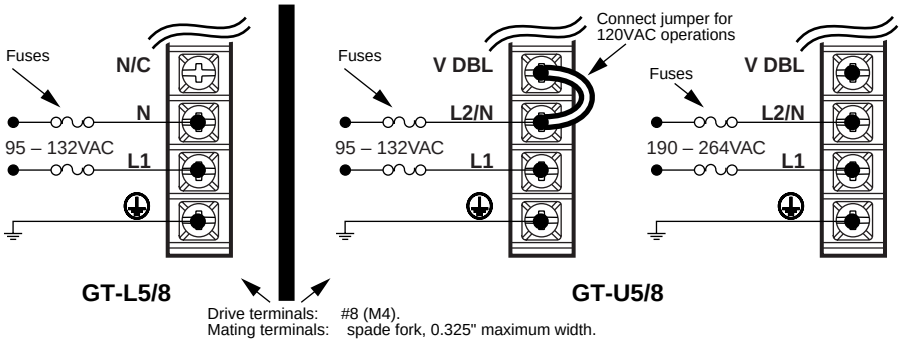

Power Connections

GT-U5 and GT-U8 AC Power Connections

Connections are illustrated in the drawing above, on the right.

CAUTION

Do not operate GT-U5/8 in the 132VAC – 190VAC range, or the drive will be permanently damaged.

120VAC Operations:

1. Connect power system's safety earth to drive's protective conductor terminal, marked with the ⏚ symbol. Do not fuse the protective conductor terminal.
2. Connect a short jumper between V DBL and L2/N. Use insulated wire for the jumper, 18 AWG (0.75 mm^2) or thicker diameter; keep the wire as short as possible.
3. Connect 120VAC, 50/60 Hz, single phase power to drive's L1 and L2/N terminals
4. **Reinstall the clear plastic terminal cover after you make connections**.

240VAC Operations:

1. Connect power system's safety earth to drive's protective conductor terminal, marked with the ⏚ symbol. Do not fuse the protective conductor terminal.
2. **Verify there is no jumper between V DBL and L2/N.**
3. Connect 240VAC, 50/60 Hz, single phase power to drive's L1 and L2/N terminals.
4. **Reinstall the clear plastic terminal cover after you make connections**.

Applying Power

1. Verify that the load is not connected to the motor, and that the motor is clamped securely in place.
2. Verify that a cable is not attached to the DRIVE I/O connector.
3. Apply power to the drive. The LEDs should display the following states:

Left LED	Right LED	Indicated State
red	off	initial power applied
off	yellow	drive initializing
red	off	drive ready, not enabled

Proceed to *Configuring the Drive*.

Step 3 – Configuring the Drive

Gemini drives have no DIP switches or potentiometers for configuration. You will use software tools to communicate with the drive and configure drive settings.

Configuration Software

Two software programs are located on the Motion Planner CD-ROM. *Motion Planner* runs on a personal computer (PC). *Pocket Motion Planner* runs on a palm PC or Handheld Personal Computer (HPC) that uses Windows CE 2.0 or higher, or on a PC. These programs are also available on the Compumotor web site at http://www.compumotor.com.

Information about installing and using each of these software tools can be found in the *Gemini Programmer's Reference*.

Establishing Communications

We assume you are using a Gemini drive and a 6K controller, and that you have only one serial port on your PC. The following procedures give instructions for moving the cable back and forth between the Gemini and 6K.

WARNING

This procedure causes the motor shaft to move. Do not connect a load to the shaft.

1. Verify that a load is not connected to the motor, and that the motor is clamped securely in place.
2. Verify that a cable is not attached to the DRIVE I/O connector.
3. Using a null modem cable, connect the drive's RS-232/485 connector to the serial port on your PC, palm PC, or HPC. (A null modem cable is available from Compumotor. See *Appendix A Specifications* for more information.) It is not necessary to turn off AC power before you plug in an RS-232 cable; however, connect RS-485 cables *before* applying AC power.
4. Install and launch Motion Planner or Pocket Motion Planner.

Proceed to *Configuring the Drive*.

Configuring the Drive

Choose one of the columns below, based upon which software program you are using—Motion Planner, or Pocket Motion Planner—and follow the procedure to configure your drive.

NOTE: If this is not the first time the drive has been configured, issue an RFS command (Return to Factory Settings) from the terminal emulator, before performing the following procedures.

Using Motion Planner to Configure the Gemini Drive

1. Install and launch Motion Planner
2. When the product selection dialog appears, select GT drive and select the COM port to which the Gemini is connected.
3. In the Editor window, click on the Gemini button at the top of the window to launch the setup wizard.
4. Select “Express Setup”, and select “Initialize wizard with factory defaults”. (If you wish to keep the existing drive configuration, you should upload it, save it, and then initialize from the editor.)
5. Click the “Next” button to proceed with the wizard. Fill in the wizard dialogs as prompted, including choosing a motor series, frame size, and part number. At the end of the wizard, click the “finish” button; this creates the setup code and places it in the Editor window.
6. Select File/Save to save the setup code to a file (*.prg) on your hard drive.
7. Select Communications/Download to download the setup code (contents of the Editor window) to the Gemini drive. When the download is complete, choose to “Reset” the drive.

   Drive setup is complete. All of the setup parameters (command values) are stored in the Gemini drive’s EEPROM and are automatically recalled when you cycle power or reset the drive.
8. Click the “Terminal” tab on the bottom of the screen to enter terminal mode.
9. Issue a DMODE13 command. This configures the drive for autorun mode, in which the motor runs in the clockwise direction at 1 rps. (The motor will not begin turning, though, because you have not yet enabled the drive.)

Proceed to *Step 4 – Connecting the 6K Controller* on the next page.*

Using Pocket Motion Planner to Configure the Gemini Drive

1. Install and launch Pocket Motion Planner.
2. Select “Tools/Config Tool”.
3. Select “Edit Current Configuration” for factory defaults. (If you wish to keep the existing drive configuration, you should upload it, save it, and then select “Edit Current Configuration”.)
4. Select drive type by choosing “Auto Detect”. The software will identify the drive type, and automatically use settings for your specific drive type. If the message “Auto Detect Failed” appears, see *RS-232 Communication Problems* in *Chapter 5 Troubleshooting*.
5. Select “Express Configuration”
6. Choose a motor series, frame size, and part number
7. Save your configuration file
8. Download the configuration file to the Gemini drive; choose to “Reset” the drive.

   Drive setup is complete. All of the setup parameters (command values) are stored in the Gemini drive’s EEPROM and are automatically recalled when you cycle power or reset the drive.
9. Enter terminal mode.
10. Issue a DMODE13 command. This configures the drive for autorun mode, in which the motor runs in the clockwise direction at 1 rps. (The motor will not begin turning, though, because you have not yet enabled the drive.)

Proceed to *Step 4 – Connecting the 6K Controller* on the next page.*

---

* If you are not using a 6K controller, proceed to *Verifying Correct System Operations without a 6K Controller*, in *Step 4* on the following pages.

Step 4 – Connecting the 6K Controller

Connecting the 6K Controller and Enabling the Drive

In this section of *Express Setup*, you will use the 6K to enable the Gemini drive. When you issue the DRIVE1 command in *Step 7*, the 6K will connect the Gemini's enable input to ground, thus enabling the drive.

NOTE: If you are *not* using a 6K controller, proceed to *Verifying Correct System Operations Without a 6K Controller*, on the next page.

We assume below that you will connect the Gemini drive to Axis 1 on the 6K. If you use a different axis, modify the following commands accordingly.

NOTE: Pocket Motion Planner can *not* be used to communicate with the 6K. Only use Motion Planner to communicate with the 6K.

1. In Motion Planner, end the session with the Gemini drive by exiting the program. Save changes. (Exiting the program stops *binary* communications with the drive.)
2. Move the null modem cable from the drive's RS-232/485 connector to the 6K's COM port.
3. Restart Motion Planner and establish communications with the 6K:
   - Select File/New/Terminal Emulator/OK.
   - Under Communications/Settings, select the 6K product and COM port you are using. (When you select a 6K product, Motion Planner begins *ASCII* communications with that 6K product.)
4. From Motion Planner, issue the following commands to the 6K:
   - DRIVE0 (ensures the drive is disabled)
   - CMDDIR0 (ensures clockwise is the positive direction)
5. Configure the 6K axis by sending the following command:
   - AXSDEF0 (configures axis 1 for step and direction)
6. Connect the 6K's Axis 1 to the Gemini's DRIVE I/O connector.
   - Use the Step & Direction Command Cable.

   Tighten the jackscrews on the cable. It is not necessary to turn off AC power before you plug in the cable. (Because you issued a DRIVE0 command above, the drive should not enable when you connect the cable.)
7. From Motion Planner, issue the following command to the 6K:
   - DRIVE1 (enables the drive)

   The motor should begin turning.

Proceed to *Verifying Correct System Operations*.

Verifying Correct System Operations

Choose one of the columns below, based upon which controller you are using—6K or non-6K—and follow the procedure to verify correct system operations.

Verifying Correct System Operations with a 6K Controller

1. Verify that the drive is enabled. (Left LED is illuminated green; right LED flashes yellow/green during autorun.)
2. Verify that the motor is rotating clockwise at approximately one revolution per second, as viewed from the shaft end of the motor. (The motor is turning because earlier you configured the drive for autorun.)
3. From Motion Planner, issue the following command:
   - DRIVE0 (disable the drive)
   - For the 6K to read and react to a GT fault, enter the command DRFEN1 for each axis.
4. End the Motion Planner session with the 6K by closing the terminal and the editor.

Proceed to *Reconfiguring the Drive*, below.

Verifying Correct System Operations without a 6K Controller

1. Enable the Gemini drive by connecting a jumper between pin 1 and pin 2 on the 50 pin DRIVE I/O connector. (For connector diagrams, see *Appendix A Specifications*.)
2. Verify that the drive is enabled. (Left LED is illuminated green; right LED flashes yellow/green during autorun.)
3. Verify that the motor is rotating clockwise at approximately one revolution per second, as viewed from the shaft end of the motor. (The motor is turning because earlier you configured the drive for autorun.)

Proceed to *Step 3* of *Reconfiguring the Drive*, below.

Reconfiguring the Drive

1. Connect the null modem cable from the PC to the drive's RS-232/485 connector.
2. In Motion Planner, establish communications with the Gemini drive:
   - Select File/New/Terminal Emulator/OK.
   - Under Communications/Settings, select the GT.
3. Issue a DMODE6 command to configure the drive for step/direction mode.

This completes the *Express Setup* procedure.

What's Next?

This chapter has given you information and instructions for performing an *Express Setup*. The following list explains the steps you should take to complete your installation, and indicates where to find additional information for each of those steps.

1. **Mount the drive**. For information on drive dimensions, environmental specifications, airflow and cooling, etc., see *Appendix A Specifications*.
2. **Mount the motor**. For information on motor dimensions, motor cables, encoders, speed/torque curves, etc., see the separate *Gemini Motor Reference Manual*.
3. **Make System Connections**. Information about Compumotor cables is in *Appendix A Specifications*. For information on cabling practices to reduce electrical noise, see *Appendix C Regulatory Compliance: UL and CE*.

   Connect any of the drive's optional inputs and outputs you may wish to use (see *Appendix A Specifications* for more information):

   - Reset Input
   - VINref – Voltage Input Reference
   - Digital Inputs (and CNTRL-P)
   - Digital Outputs
   - Encoder Output
   - Analog Monitor

   Connect any of the drive's special features you may wish to use (see *Chapter 4 Special Features* for more information):

   - Relay, and how to control a Motor Brake
   - +24VDC "Keep Alive" Power
   - Multiple Drive Installations
   - RS-232 Daisy Chain
   - RS-485 Multi-Drop
4. **Connect the Load**.
5. **Configure Your Drive**. After completing your hardware installation in Steps 1 – 4 above, proceed to *Chapter 3 Configuration* for information about additional drive configuration options, including:

   - **Advanced Features Configuration** – Configure settings for Active Damping, Electronic Viscosity, ABS Damping, and encoderless stall detect.
   - **Motor Matching** – Match your drive to your particular motor.

CHAPTER THREE

3 Configuration

IN THIS CHAPTER

- Configuration
- Damping Configuration
- Stall Detect Configuration
- Motor Matching

Configuration

You can configure the Gemini drive's settings for optimum system performance. For most of these settings, configuration is optional—if you do nothing, the drive will use default values the very first time it powers up. If you change any settings, the new settings are automatically saved. Most changed settings are effective immediately, but some require that you issue a reset (software command, reset input, or cycle power) before the drive acts upon them.

This chapter will give an overview of all software commands that configure drive settings. For more in depth descriptions about the software commands, see the separate *Gemini Programmer's Reference*.

At the end of this chapter, we have provided procedures you can use to configure the Gemini drive's settings for advanced features, including damping and stall detect; and to match the drive to the motor.

Software Programs for Configuration

Two software programs used for drive configuration are located on the Motion Planner CD-ROM. *Motion Planner* runs on a personal computer (PC). *Pocket Motion Planner* runs on a palm PC or Handheld Personal Computer (HPC) that uses Windows CE 2.0 or higher, or on a PC. These programs are also available on the Compumotor web site at http://www.compumotor.com.

Information about installing and using each of these software tools can be found in the *Gemini Programmer's Reference.*

Overview of Configuration Commands

Motion Planner and Pocket Motion Planner's configuration procedures present commands in groups organized by function. The overview below is organized similarly to the software's *Full Configuration* procedure. (*Express Setup*, which was used in *Chapter 2 Installation*, gave you fewer configuration options.)

Motor Settings

If you select a Compumotor motor from the list of motors the software presents to you, the software will send settings to the drive for the motor you selected. No further motor configuration setting is necessary on your part.

If you use a non-Compumotor motor, or choose to configure a Compumotor motor, use the following commands to configure motor settings:

Command	Description
DMTSTT	static torque
DMTIC	continuous current
DMTIND	inductance
DMTRES	phase resistance
DMTJ	rotor inertia
DPOLE	number of pole pairs
DIGNA	current loop gain
DIGNB	current loop gain

DIGNC	current loop gain
DIGND	current loop gain

If you use a non-Compumotor motor, see *Appendix B – Using Non-Compumotor Motors* for additional instructions.

System Settings

The system settings configure the drive's mode of operation, resolution, inertia ratio, and fault modes.

Drive Settings

Command	Description	Options:
DMODE	mode of operation:	position control (step/direction)
		position control (step/direction inverted)
		position control (clockwise/counterclockwise)
		encoder tracking[1]
		±10V velocity command
		autorun[2]
DRES	input step resolution	you enter a number
ORES	step/dir output resolution	you enter a number
DAUTOS	auto standby enable	can be turned on or off

[1]Encoder tracking mode uses incoming encoder pulses to command motion.

[2]Autorun mode commands motion at a constant one revolution per second, with no pulse source connected. It is used during *Express Setup*, and for troubleshooting.

Load Settings

Command	Description	Options:
LJRAT	inertia ratio	you enter a number

Fault Settings

Command	Description	Options:
FLTSTP	fault on startup indexer pulses	can be turned on or off
FLTDSB	fault on disable	can be turned on or off
ESK	fault on stall	can be turned on or off
DSTALL	stall sensitivity	you enter a number

Input/Output (I/O) Settings

The I/O settings configure the drive's three digital inputs, three digital outputs, and two analog monitors.

Digital Inputs

Command	Description	Options:
LH	hard limit disable	hard limits disabled
		negative limit only
		positive limit only
		both hard limits enabled
INLVL	input sense	active high or active low
		(inputs 1, 2 and 3 can be set independently)
INDEB	input debounce time	can be set in milliseconds

Digital Outputs

Command	Description	Options:
OUTLVL	output sense	active high or active low
		(outputs 2, 3 and 4 can be set independently)

Analog Monitors

Command	Description	Options:
DMONAV	analog monitor A variable	unused/turn off variable
		drive temperature
		velocity setpoint
		acceleration setpoint
		phase A commanded current
		phase A actual current
		phase B commanded current
		phase B actual current
		phase A commanded voltage
		phase B commanded voltage
DMONAS	analog monitor A scaling[1]	you enter a percentage[1]
DMONBV	analog monitor B variable	same choices as DMONAV
DMONBS	analog monitor B scaling[1]	you enter a percentage[1]

[1]Monitor output is scalable from -2000% to +2000%, but is limited to ±10V peak to peak.

Communications Settings

The communication settings configure the drive for RS-232/485 communications.

RS-232/485

Command	Description	Options:
ERRLVL	error level	you enter a number
ECHO	echo enable	can be turned on or off
E	listening	can be turned on or off

Motor Control Settings

Motor control settings are divided into two groups: motor matching, and damping settings.

Motor Matching

Motor matching is used to match the drive to your specific motor. A procedure for performing motor matching is presented at the end of this chapter. Relevant commands are:

Command	Description	Options:
DWAVEF	% 3rd harmonic current waveform component	you enter a number
DPHBAL	phase B balance	you enter a percentage
DPHOFA	phase A current offset	you enter a percentage
DPHOFB	phase B current offset	you enter a percentage

Damping

These commands are used to configure the drive's settings for damping. A procedure for adjusting damping settings is presented below. Relevant commands are:

Command	Description	Options:
DACTDP	active damping gain	you enter a number
DDAMPA	damping during acceleration	can be turned on or off
DELVIS	electronic viscosity	can be turned on or off
DABSD	ABS damping	can be turned on or off

Procedure for Configuring Advanced Features

The Gemini drive has advanced motor control features that you can configure for increased damping, increased low speed smoothness, and increased disturbance rejection; and for detecting motor stalls.

Configuring Damping Settings

The Gemini drive's three damping modes reduce vibration, increase low speed smoothness, and decrease load settling time. These damping modes are independent of each other, and operate within specific velocity ranges.

ABS Damping

ABS damping provides load-invariant damping at extreme low speeds. It targets applications that require minimal zero-speed settling time (for example, pick-and-place applications with varying load).

Command	Function	Velocity Range	Default	Required Parameters
DABSD	ABS Damping	0 to 0.2 rps*	Disabled	DMTRES, DMTIND
		*motor dependent		

Electronic Viscosity

Electronic viscosity targets applications that require reduced low-speed velocity ripple and increased smoothness, as well as aggressive low-speed damping. NOTE: If ABS Damping is enabled, it overrides electronic viscosity in the 0 to 0.2 rps velocity range.

Command	Function	Velocity Range	Default	Required Parameters
DELVIS	Electronic Viscosity	0 to 3 rps**	Disabled	DMTJ, DMTSTT, DPOLE DMTIC, DMTIND, LJRAT
		**motor and load dependent		

Active Damping

Active damping targets applications that require high accelerations, fast settling at commanded speed, mechanical vibration disturbance rejection, and highly stable (non-resonant) motion.

Command	Function	Velocity Range	Default	Required Parameters
DACTDP	Active Damping	>3 rps	Enabled (DACTDP4)	DMTJ, DMTIND, DMTSTT, LJRAT

Note: You can use the DDAMPA command to disable ABS damping and electronic viscosity during acceleration rates greater than 50 rps^2. This allows full motor torque to be used during acceleration.

Use the following procedures to configure the damping settings. You can usually find the best setting by using touch or sound. If this is not adequate, use a tachometer attached directly to the motor by means of a stiff coupler.

Configuring ABS Damping (DABSD)

The default setting is *disabled*. (DABSD0)

1. To turn ABS damping *on*, use the DABSD command. (DABSD1)
2. If you use a Parker motor, the following parameters are automatically set when you use the configuration utilities (Motion Planner or Pocket Motion Planner) to select a motor. You do not need to enter values for them now.

   If you use a non-Parker motor, use the following commands to enter accurate values for the specified motor parameters:

Command:	**Motor Parameter:**
DMTRES	motor resistance
DMTIND	motor inductance

   The figure below shows performance with ABS Damping, with Electronic Viscosity, and without damping.

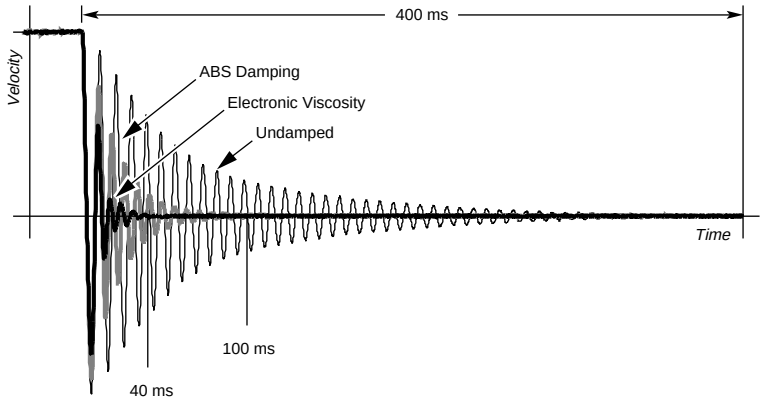

Damping Performance

Configuring Electronic Viscosity (DELVIS)

1. Enter an accurate value for the load parameter, using the following command:

Command:	**Parameter:**
LJRAT	system load-to-rotor inertia ratio

2. If you use a Parker motor, the following parameters are automatically set when you use the configuration utilities (Motion Planner or Pocket Motion Planner) to select a motor. You do not need to enter values for them now.

   If you use a non-Parker motor, use the following commands to enter accurate values for the specified motor parameters:

Command:	**Motor Parameter:**
DMTJ	rotor inertia
DMTSTT	static torque
DPOLE	number of motor pole pairs
DMTIC	continuous current
DMTIND	inductance

3. Start with DELVIS set to 0, which is *disabled*. (This is the default setting.)
4. Increase DELVIS until your system performs as you require.
   - 1 - 7 is the full range
   - 5 provides optimal damping
   - 0 is *off*

   The figure above shows performance with Electronic Viscosity, with ABS Damping, and without damping.

Configuring Active Damping (DACTDP)

Using motor and load parameters, the drive calculates the optimum damping setting for your system, and scales this value to a setting of DACTDP20. However, the default setting is DACTDP4.

1. Enter an accurate value for the load parameter, using the following command:

Command:	Parameter:
LJRAT	system load-to-rotor inertia ratio

2. If you use a Parker motor, the following parameters are automatically set when you use the configuration utilities (Motion Planner or Pocket Motion Planner) to select a motor. You do not need to enter values for them now.

   If you use a non-Parker motor, use the following commands to enter accurate values for the specified motor parameters:

Command:	Motor Parameter:
DMTJ	rotor inertia
DMTSTT	static torque
DMTIND	inductance

3. Begin configuration with low values of DACTDP. Low values yield less aggressive damping.
4. Increase DACTDP until the system performs as you require. The optimum setting is DACTDP20. Note that higher values tend to cause overly aggressive damping, and generate jerk impulses that may result in machine vibration.

Configuring Stall Detect Settings

You can use the Gemini drive's encoderless stall detect function to detect motor stalls. A stall occurs when the motor's rotor loses synchronism with the stator. An external feedback device is not required to detect stalls.

Some machine safety regulations require that external hardware feedback be used. Do not use the Gemini's stall detect function as a replacement for external feedback in such cases.

In order for the drive to detect a stall, the duration of the stall must be greater than 50 milliseconds. NOTE: if you use high values of active damping, extremely aggressive accelerations are possible during which the motor may skip poles (lose position). This loss of position can be less than 50 milliseconds; if so, it will not be recognized as a stall.

Because the command velocity must be in the 3 – 37 rps range for stall detect to be active, the drive will not recognize static loss of position as a stall. Therefore, do not use this function to detect loss of holding torque in vertical applications.

Settings are summarized below.

Stall Detect Settings:

Command:	DSTALL
Default:	Disabled (DSTALL0)
Velocity Range:	3 to 37 rps
Required Parameter:	LJRAT

Stall detect performance is based on motor parameters that you set up with the configuration utility in Motion Planner or Pocket Motion Planner. For optimum performance, accurate motor parameters are required.

If you select a Compumotor motor with the configuration utility, the motor parameters are set automatically, according to the motor you have chosen. If you use other motors, see *Appendix B Using Non-Compumotor Motors*.

Use the following procedures to configure the stall detect settings.

Configuring Stall Detect

The DSTALL command sets the sensitivity for the stall detection circuitry. The default setting is *disabled*. (DSTALL0)

NOTE: Match the motor to the load (see the procedure on the following pages) *before* you configure stall detect settings.

1. Enter an accurate value for LJRAT.

   The LJRAT command sets the system's load-to-rotor inertia ratio. LJRAT must be set accurately in order for stall detect to function properly.

2. Begin configuration with low DSTALL values.
   - 1 - 50 is the full range
   - 0 is *off*

   The table below lists effective ranges of DSTALL values. Enter a value, based on your motor size:

Motor Frame Size:	**Size 23**	**Size 34**	**Size 42**
DSTALL Value Range:	1 – 15	10 – 40	30 – 50

3. Verify the DSTALL value you entered by forcing a stall as you monitor TASX. At the precise moment the stall occurs, TAS Bit #17 should be set. If Bit #17 is set before or after the stall occurs, modify the DSTALL value as follows:
   - If Bit #17 is set *before* the stall occurs, *decrease* the DSTALL value
   - If Bit #17 is set *after* the stall occurs, *increase* the DSTALL value

   NOTE: For the 6K to read and react to a GT fault, enter the command DRFEN1 for each axis.

4. Run the system for an extended period of time to verify that no false stalls are detected.

Configuring Fault on Stall Mode

1. If you enable the Fault on Stall mode (ESK1), the occurrence of a stall will immediately stop pulses from being sent to the motor and will disable the drive (DRIVE0)
2. If Fault on Stall is enabled (ESK1), the stall is reported by the following commands:
   - TAS bit #12
   - TER bit #1

   NOTE: For the 6K to read and react to a GT fault, enter the command DRFEN1 for each axis.

Procedure for Motor Matching

Due to slight manufacturing variations, each motor has its own particular characteristics. The drive has three settings—phase offset, balance and waveform—that can be adjusted to match the drive to a specific motor. The factory settings for these parameters will be acceptable in most applications. If you need increased smoothness or accuracy in your system, or if motor resonance causes vibration problems, perform the following procedure. You will match your drive to your motor by adjusting the drive settings, and selecting the best current waveform.

CAUTION

Verify correct series or parallel wiring. The label on the motor may be inaccurate if the motor has been rewired after it left the factory.

WARNING

The following procedure causes the motor shaft to rotate.

Setting Up Your System for the Motor Matching Procedure

Before beginning the *Motor Matching* procedure, set up your system as follows:

1. The *Motor Matching* procedure below is a *bench top* procedure—temporarily connect the drive, motor, indexer, and PC running Motion Planner (or a palm PC running Pocket Motion Planner), but do not permanently mount the components yet.
2. Properly secure the motor
3. Set the motor current at the value recommended for your motor.
4. Do not attach a load to the motor shaft, or anything else that affects or changes the inertia of the rotor. The characteristics you are matching are those only of the drive/motor combination.
5. Before beginning the *Motor Matching* procedure, you must use Motion Planner or Pocket Motion Planner to configure the drive for your motor. See *Step 3* of *Chapter 2 Installation* for instructions.
6. Apply AC power when necessary to perform the steps below.

Motor Matching Procedure

1. Apply power to the drive, enable the drive, and allow the drive and motor to reach a stable operating temperature. This will take at least 5 minutes, and may take up to 30 minutes. For optimum results, perform the matching procedure at the same ambient temperature at which your application will operate.
2. Launch the *Interactive Motor Matching* procedure of Motion Planner (MP) or Pocket Motion Planner (PMP).
3. Select the *PHASE A OFFSET* button.
4. Set the motor speed to the recommended value for your motor.
5. Vary the motor speed about the recommended value, and find the most resonant operating speed. (Varying the speed makes resonance more noticeable.) You can find the *resonant speed* by touching the motor lightly with your fingertips as you vary the speed. When you notice the strongest vibrations and increased noise, the motor is running at a resonant speed. Note the actual speed; you will use it in the steps below.
6. Change the offset adjustment using the left and right arrow keys or by using the touch screen (if available). Adjust the offset for smoothest operation.
7. Select the *PHASE B OFFSET* button.
8. Change the offset adjustment using the left and right arrow keys or by using the touch screen (if available). Adjust the offset for smoothest operation.
9. Select the *PHASE B BALANCE* button.
10. Set the motor speed to one half the speed found in *Step 5*. Vary the motor speed about this setting, and find the most resonant operating speed. Change the balance adjustment using the left and right arrow keys or by using the touch screen (if available). Adjust the balance for smoothest operation.
11. Repeat steps 3-10 if necessary.
12. Select the *WAVEFORM* button.
13. Set the motor speed to one fourth the speed found in *Step 5*. Vary the motor speed about this setting, and find the most resonant operating speed.
14. Change the current waveform using the left and right arrow keys or by using the touch screen (if available). Adjust the current waveform for the smoothest operation.
15. Select the *OK* button when you are finished matching the drive to the motor. By selecting *OK*, you will be storing the adjusted values in the parameter configuration file. *Selecting the CANCEL button will return the adjusted values to the values previously stored in the configuration file.*

This completes the motor matching procedure.

CHAPTER FOUR

Special Features

IN THIS CHAPTER

- Relay Connections
- +24VDC Keep Alive Power Connections
- Multiple Drive Installations
- RS-232/485 Communications
- Updating the Drive's Operating System

Relay Connections (optional)

To use the drive's internal relay, connect your external circuit to the RELAY COM and RELAY N.O. terminals. The next drawing shows a typical application—connecting a motor brake to the relay terminals.

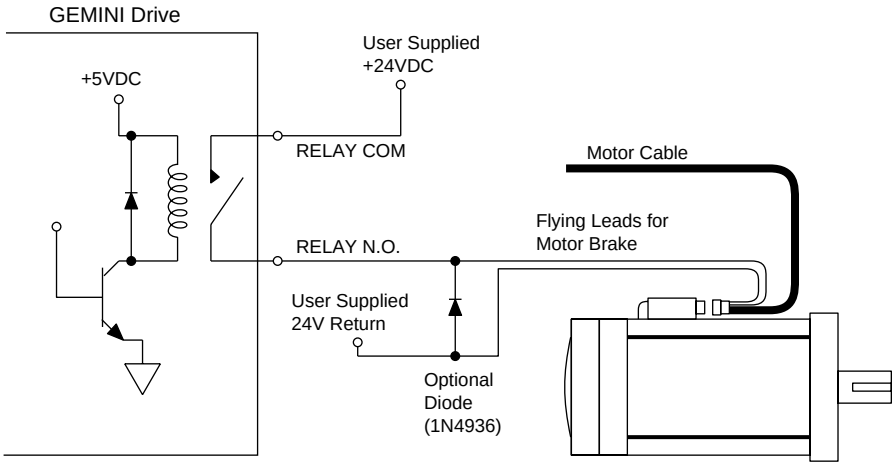

Relay Connections

The relay is normally open. When the drive is enabled, it holds the relay closed. If the drive faults or is disabled, the relay will open.

Relay Operation:

Drive Condition:	Relay State:
Enabled	Closed
Faulted	Open
No AC power*, or not enabled	Open

* +24VDC power does not affect the relay. With +24VDC applied, the relay will be open if AC power is *not* applied.

Relay Specifications:

Relay Type:	Dry contact mechanical relay
	Normally open
Relay Rating:	5 amps at 24VDC or 120VAC

+24VDC "Keep Alive" Power Connections (optional)

The following drawing shows how to connect an external +24VDC power source to the drive. Use the removable terminal connector that is supplied with the drive.

With +24VDC applied, the drive's internal control board will remain powered when the primary AC power source is disconnected, and will maintain several important functions, including communication diagnostics, position feedback, and other logic functions.

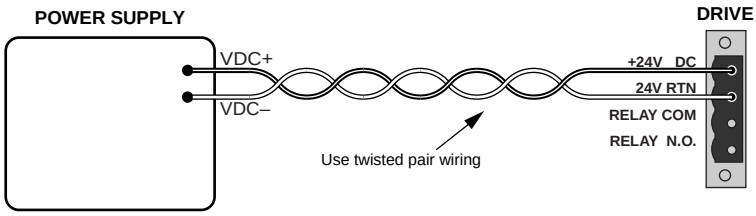

+24VDC Power Input

+24VDC Specifications:

Input voltage range:	19.2 – 28.8 VDC
Input current:	500 mA (maximum)
Functions powered under +24VDC:	position information (encoder or motor position counters in drive)
	communications
	diagnostics
	motor feedback
Software status bit (see TASX command):	indicates “keep alive” is active

CAUTION

Do not exceed 28.8VDC input voltage

Multiple Drive Installations

Safety Earth Connections

For multiple drive installations, we recommend a single point or “star” safety earth configuration, as shown below.

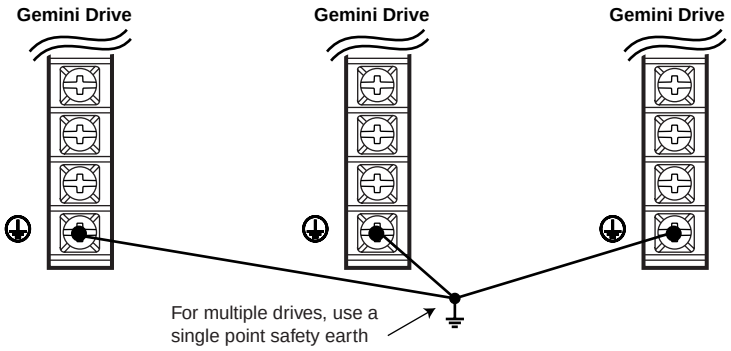

Multiple Drives: Single Point Safety Earth

Under normal operation, no current should flow through the safety earth connection.

RS-232/485 Communications

The Gemini drive has a single serial port marked, “RS-232/485,” on the front of the unit. In the following this port will be referred to as the COM port. The Gemini drive uses a binary language for communication; it does not use ASCII. To enable 6000 ASCII level communication in a terminal mode, the Gemini uses a translator utility in Pocket Motion Planner and in the CommServer (for use with Motion Planner). In all other ways, the serial communication functions in the Gemini behave like other Compumotor products. Gemini drives can be connected together in RS-232 Daisy Chains and RS-485 Multi-Drop configurations.

In this section:

- Establishing Communications
- Configuring the serial port
- RS-232 Communications
- RS-232 Daisy Chaining
- RS-485 Communications
- RS-485 Multi-Drop

Establishing Communications

The drive’s configuration port is a 9 pin D-connector. You can use it for either RS-232 or four wire RS-485 communications, as shown in the next drawing.

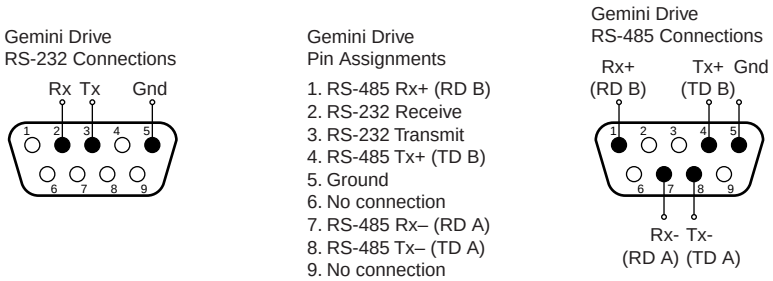

RS-232/485 Connections

To communicate with the drive, connect the drive’s RS-232/485 connector to a PC running Motion Planner, or to a palm PC running Pocket Motion Planner with Windows CE. Verify your computer’s connector pinout; you may need to use a “null modem” cable to connect your computer’s transmit terminal to the Gemini’s receive terminal, and your computer’s receive terminal to the Gemini’s transmit terminal.

Configuring the Serial Port

The following commands can be used to configure the Gemini serial port and the terminals used by Motion Planner and Pocket Motion Planner. Complete descriptions of these commands can be found in the *Gemini Programmer's Reference*.

E	Enable Serial Communication
ECHO	Enable Communication Echo
BOT	Beginning of Transmission Characters
EOT	End of Transmission Characters
EOL	End of Line Terminating Characters
ERRBAD	Error Prompt
ERRLVL	Error Detection Level
ERROK	Good Prompt

- The baud rate for the Gemini is set at 9600. Future releases of Gemini firmware will offer additional baud rate choices. Check the Compumotor web site (www.compumotor.com) for information on new software releases.
- The Gemini serial port contains connections for both RS-232 and RS-485 communication. The Gemini drive will automatically switch between RS-232 and RS-485 mode depending on which connections in the port's 9 pin D-connector are active. See wiring diagrams.
- Some RS-232 cables use hardware handshake signals that are used by the RS-485 pins. The RS-485 interface will automatically disable itself if this is detected. If this occurs, you must reset the drive to re-enable the RS-485 interface.

RS-232 Communications

Pin Out for RS-232 Communication:

Pin	Description
2	Rx (receive). Connect to Tx on your computer.
3	Tx (transmit). Connect to Rx on your computer.
5	GND (logic ground). Connect to GND on your computer

- Maximum RS-232 cable length is 50 feet (15.25 meters)
- To establish unique addresses for daisy-chained units, use the ADDR command.

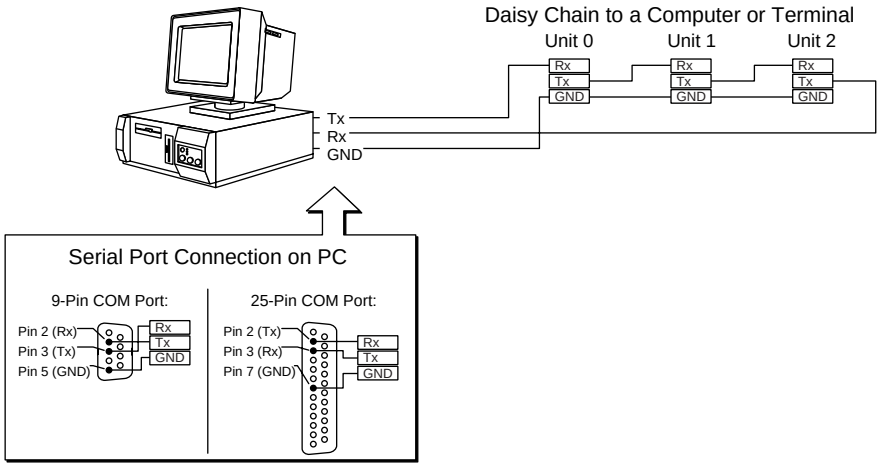

RS-232 Daisy Chain Connections

RS-232 Daisy-Chaining

Up to ninety-nine stand-alone Gemini drive products may be daisy-chained. Refer to the wiring diagrams for daisy-chain connections.

Follow these steps to implement daisy-chaining:

Step 1

To enable and disable communications on a particular drive unit in the chain, you must use the Daisy-Chain Address (ADDR) command to establish a unique device address for each unit. The ADDR command automatically configures unit addresses for daisy chaining. This command allows up to 99 units on a daisy chain to be uniquely addressed.

Sending ADDRi to the first unit in the daisy chain sets its address to be (i). The first unit in turn transmits ADDR(i + 1) to the next unit to set its address to (i + 1). This continues down the daisy chain until the last unit of (n) daisy-chained units has its address set to (i + n - 1).

Note that a drive with the default device address of zero (0) will send an initial power-up start message similar to the following:

*TREV-GT6-U8_D1.0_F1.0

Step 2

Connect the daisy-chain with a terminal as the master.

To allow daisy chaining you must turn on echo mode for each drive on the chain (ECHO1). The ADDR command automatically leaves each device in echo mode after the device address is set when in RS-232 mode.

In the Gemini, daisy chaining can work in all error levels except error level 0 (see ERRLVL command). To set the drive error levels to your preferred state you can address each drive individually or send a global command. Note the address syntax used to send data to particular units:

Commands:

```
1_ERRLVL4        ; Set error level to 4 for unit #1
2_ERRLVL4        ; Set error level to 4 for unit #2
ERRLVL4          ; Set error level to 4 for all units on the chain
```

Unlike ASCII-based products, the binary prompts associated with the different error levels can pass through the daisy chain to the terminal controller without interfering with the other drives. At that point they are translated into the text strings defined by the ERROK and ERRBAD commands. Consequently, error levels using prompts can be used in Gemini daisy chains.

To receive data from a particular drive on the chain, you must prefix the command with the appropriate unit's device address and an underline:

Commands:

```
1_DRES           ; Request drive resolution from unit #1
*DRES25000                ; Response from unit #1
```

Use the E command to enable/disable RS-232 communications for an individual unit. If all drive units on the daisy chain are enabled, commands without a device address identifier will be executed by all units. Because of the daisy-chain's serial nature, the commands will be executed approximately 1 ms per character later on each successive unit in the chain (assuming 9600 baud).

Units with RS-232 disabled (EØ) will not respond to any commands, except E1; however, characters are still echoed to the next device in the daisy chain.

Commands:

3_E0	; Disable RS-232 on unit #3
DRES25000	; Set resolution to 25000 on all other units
3_E1	; Enable RS-232 on unit #3
3_DRES4000	; Set resolution to 4000 on unit #3

Verify communication to all units by using the techniques described above.

Step 3

Now that you have verified that the daisy chain is set up properly, you can use the various Pocket Motion Planner and Motion Planner tools to configure and monitor all units on the daisy chain.

RS-485 Communications

Pin Out for 4-Wire RS-485 Communications:

Pin	Description	
1	Rx+	(also called RD B)
4	Tx+	(also called TD B)
5	GND	(logic ground)
7	Rx-	(also called RD A)
8	Tx-	(also called TD A)

- Maximum RS-485 cable length is 4000 feet (1220 meters)
- To establish unique addresses for multi-drop units, use the ADDR command.
- Keep wires as short as possible. Termination resistors may be required on long cable runs.
- Connect RS-485 cables before applying power to the drive.
- Recommended cable: Belden 9842
- Refer to the diagram below for connection information.

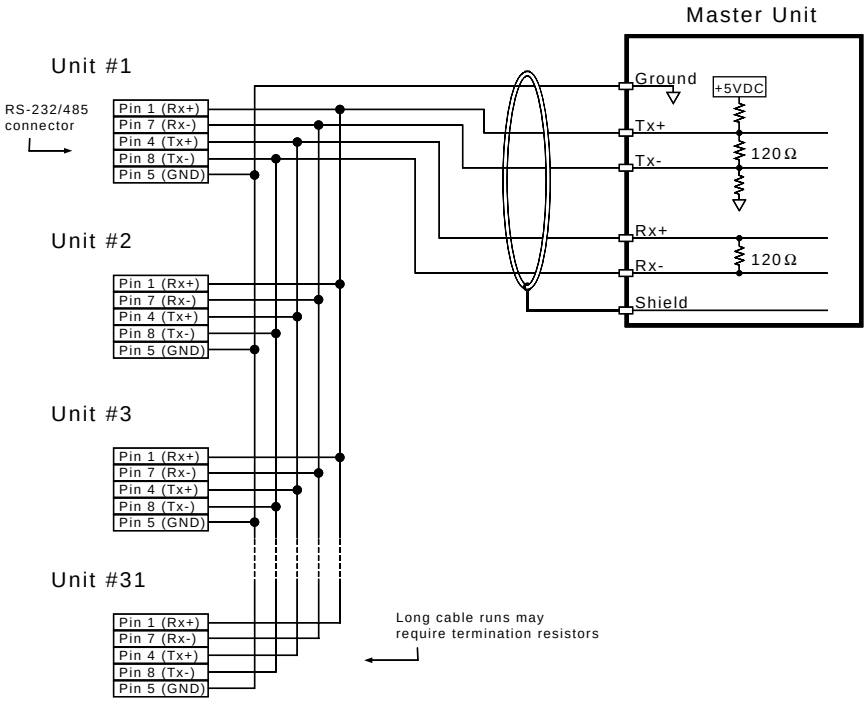

RS-485 Multi-drop Connections

RS-485 Multi-Drop

Up to 99 Gemini drives may be multi-dropped. Refer to the diagrams in this section for daisy-chain connections.

The ADDR command allows you to establish up to 99 unique addresses. To use the ADDR command, you must address each unit individually before it is connected on the multi drop. For example, given that each product is shipped configured with address zero, you could set up a 4-unit multi-drop with the commands below, and then connect them in a multi drop:

1. Connect the unit that is to be unit #1 and transmit the Ø_ADDR1 command to it.
2. Connect the unit that is to be unit #2 and transmit the Ø_ADDR2 command to it.
3. Connect the unit that is to be unit #3 and transmit the Ø_ADDR3 command to it.
4. Connect the unit that is to be unit #4 and transmit the Ø_ADDR4 command to it.

If you need to replace a unit in the multi drop, send the Ø_ADDRi command to it, where “i” is the address you wish the new unit to have. For RS-485 multi-drop to work properly, each drive must have echo mode turned off (ECHOØ). The ADDR command will automatically do this when the drive is in RS-485 mode.

In order to prevent the collision of prompts being transmitted simultaneously from several drives in response to a global command, you must configure the drives for either error level 2 or error level 0 in multi-drop mode. This can be done as follows:

Commands:

```
1_ERRLVL2        ; Set error level to 2 for unit #1
2_ERRLVL2        ; Set error level to 2 for unit #2
3_ERRLVL2        ; Set error level to 2 for unit #3
```

In general, to send a Gemini command from the master unit to a specific unit in the multi-drop, prefix the command with the unit address and an underscore (e.g., 3_DRES25000 sets the drive resolution to 25000 steps on unit #3). The master unit may receive data from a multi-drop unit. You should now verify that you can access each unit on the multi-drop.

Now that you have verified that the multi-drop is set up properly, you can use the various Pocket Motion Planner and Motion Planner tools to configure and monitor all units on the multi-drop.

Updating the Drive’s Operating System

The Gemini drive runs under an internal software operating system (firmware). The operating system was loaded into your drive during the manufacturing process, and under ordinary circumstances you will not need to update your drive’s operating system. However, because Compumotor continues to add enhancements, you may want to upgrade the operating system. You may obtain a new operating system file from the Compumotor web site, or from Technical Support (see phone numbers on the inside cover of this manual).

For more information about web site downloads and update procedures, see the *Gemini Programmer's Reference*.

CHAPTER FIVE

Troubleshooting

IN THIS CHAPTER

- LED Status
- Software Commands for Troubleshooting
- RS-232/485 Troubleshooting
- System Problems

Troubleshooting Guidelines

If your system is not functioning properly, first try these steps.

First Troubleshooting Steps:

- Is the left LED illuminated? If not, look for problems with AC power. Also see *System Problems* at the end of this chapter.
- Is the left LED illuminated RED? Try to enable drive by connecting pins 1 and 2 of the 50 pin DRIVE I/O connector. If you have a controller connected, this is usually done by sending a DRIVE1 to the controller.
- Cycle power to the drive. Cycling power clears most faults. Notice if the LED turns green, or if it goes directly from off to red.
- Check wiring and feedback connections

If these steps do not solve your problem, follow the general troubleshooting procedure outlined below:

General Troubleshooting Procedure

- Check the LEDs (see the chart below)
- Launch Motion Planner or Pocket Motion Planner
- Verify good RS-232/485 communications
- Save the configuration file
- Use software commands for problem identification:

  TERRLG reports the last 10 error conditions
  TAS reports on axis status
  TASX extended reports on axis status and conditions
  TCS reports codes for specific faults and warnings
- Look for non-Drive problems (problems with other parts of the system)

Detailed procedures for each of these topics are given in the rest of this chapter.

LEDs

The drive has two LEDs. The LED on the left can be red or green. The LED on the right can be yellow or green. LED illumination states, and the conditions they indicate, are tabulated below.

Left LED (Green/Red)	Right LED (Yellow/Green)	Indicated Condition:
off	Yellow	Initialization
Red (flashing)	off	Awaiting flash download
Red (flashing)	Yellow (flashing)	Programming flash memory
Red	Green	Keep Alive mode
Green	Green (flashing)	Incoming steps (variable rate)
Green	Yellow/Green (flashing)	Autorun mode
Red	off	Drive not enabled; or, Drive faulted
Green	off	Drive ready

Establish Communications and Verify Drive Configuration

If you cannot enable the drive, and examining LED conditions have not solved your problem, then establish communications with the drive and launch Motion Planner or Pocket Motion Planner. (See *Chapter 2 Installation* for detailed instructions on establishing communications. Information about installing and using these software programs can be found in the *Gemini Programmer's Reference*.)

If you are unable to establish communications, see *RS-232/485 Communication Problems* later in this chapter.

Save the Configuration File

Since further troubleshooting steps may change the drive configuration, you should upload the current drive configuration file and save it to your PC, in case you need it for future reference.

Reconfigure the Drive

To verify proper configuration, you may wish to reconfigure the drive. Pay particular attention to selecting proper configuration settings for the motor that you have installed, as motor configuration problems can cause a variety of errors. Download the new configuration to the drive; the changes will become effective after you RESET or cycle power. (A simplified configuration procedure was presented in *Chapter 2 Installation*. For full configuration information, see *Chapter 3 Configuration*.)

Software Commands for Troubleshooting

Four software commands are very useful for identifying problems. This section provides guidelines and tips for using these commands. For full command descriptions and tables of error codes, see the *Gemini Programmer's Reference*.

TERRLG – Transfer Error Log

The TERRLG command displays the last ten error conditions. It is updated every time an error occurs; you may want to make a note of the errors listed the first time you issue the command, as this original information will be written over as subsequent errors occur.

You can use the CERRLG command to clear the contents of the error log. This allows you to start the diagnostic process when the error log is in a known state.

TAS – Transfer Axis Status

The TAS command returns the status of all axes, in the form of a 32 bit response (1 = Yes; Ø = No). Note the positions of bits that are “1” rather than “0”—they indicate problem areas, some of which are:

Status Condition:	Solution:
Drive shut down	If this is the only bit that is set, it indicates that the drive is waiting to be enabled. To enable the drive, connect pins 1 and 2 of the DRIVE I/O connector—usually done by sending a DRIVE1 to the controller.
Drive faults occurred	To identify which faults occurred, check the TASX command. (See following section.)
Hardware limit hit	The default is for limits to be disabled. If these bits are set, install or check limit switches; or disable limits with the LHØ command.

See the *Gemini Programmer's Reference* for the complete list of status conditions.

TASX – Transfer Extended Axis Status

The TASX command returns the axis status conditions. It reports more information than the TAS command, and is helpful for identifying which faults occurred. It returns a 32 bit response (1 = Yes; Ø = No). Note the positions of bits that are "1" rather than "0"—they indicate problem areas, some of which are:

Bit #:	Fault:	Solution:
1	Motor temperature fault	Thermal switch in motor is open; motor is hot
2	Low voltage fault	Check acceleration; AC power wiring and input level
3	Drive temperature fault	Check ventilation; ambient temperature
7	Configuration error	Drive cannot operate as configured. See TCS command, below.
8	Incoming steps at startup	Stop indexer pulses.
10	Bridge fault	Check motor wiring for short circuit. (See note below.)
17	Stall detected	Stall was detected, regardless of ESK setting.
18	Excessive velocity command	Commanded velocity exceeds DMVLIM limit. (Warning only: does not light LED or stop motion.)
20	Power Dissipation active	Internal regeneration circuit was active. Check deceleration. (Warning only: does not light LED or stop motion.)
23	User fault	Indicates input #3 was active.
24	Keep Alive active	Not a fault; indicates +24VDC power at keep alive input.
25	Power dissipation fault	Indicates excessive regeneration. Check deceleration, load inertia.
28	Configuration warning	Drive altered a user entered value. See TCS command. (Warning only: does not light LED or stop motion.)
29	Encoder output failure	ORES is set too high for maximum velocity commanded

(NOTE: Bridge fault can also indicate output bridge overheating. To test, check drive heatsink temperature; allow drive to cool, then reset drive. If fault remains, it is due to a short circuit—check motor and motor wiring. If fault reoccurs after several minutes, it may be due to restricted airflow over the drive's heatsink.)

See the *Gemini Programmer's Reference* for the complete list of status conditions.

TCS – Transfer Configuration Status

If the TASX command indicates a configuration error or warning, use the TCS command to help ascertain the cause of the condition.

NOTE: TCS reports only one error code; errors will overwrite warnings. Therefore, if there is more than one error condition present:

1. Resolve the known error.
2. Cycle power to the drive, issue a RESET command, or activate the RESET input.
3. If another error condition presents itself (e.g., the drive will not enable), check for subsequent errors with the TCS command.

See the *Gemini Programmer's Reference* for the complete list of faults and warnings.

RS-232/485 Communication Problems

If you cannot establish RS-232 or RS-485 communications, the next sections give instructions for procedures to help isolate problems.

Testing the COM Port

Install and launch either Motion Planner or Pocket Motion Planner. See *Chapter 2 Installation* for information about using these software tools.

RS-232 communications require that you use a null modem cable. See *Chapter 2 Installation* for connection instructions. Pinout diagrams for the Gemini's RS-232/485 connector is in *Chapter 4 Special Features*.

Testing the COM Port with Motion Planner

1. Install and launch Motion Planner.
2. When the product selection dialog appears, select a Gemini drive and select the COM port to which the Gemini is connected.
3. If you see the error message "unable to connect to com *n*", then the wrong COM port is selected, or the COM port is busy.
   - Check the COM port setting again. Your PC may have multiple COM ports. Try connecting to a different port.
   - Check to see if another application is busy using the COM port. Close all other applications.
4. Under Communications/Settings/Port, you can also select "Communications Test". If the test fails:
   - Try connecting to a different port.
   - Check AC power to the drive. (The drive's left LED should be illuminated, either red or green.)

If these steps do not solve your problem, see *Testing the Cable*, below.

Testing the COM Port with Pocket Motion Planner

1. Install and launch Pocket Motion Planner.
2. From the "Communications" menu, select "Com Port", and select an appropriate com port.
3. From the "Communications" menu, select "Test Com Port".
4. You will see one of the following responses:

   If the response is "Communications OK!", then:
   - communications are working properly.

   If the response is "Communications problem found", then:
   - Verify the drive is powered up
   - Verify the RS-232 cable is connected to the drive
   - Check your com port settings within Pocket Motion Planner
   - Make sure no other programs or hardware are trying to use this com port.

If these steps do not solve your problem, see *Testing the Cable*.

Testing the Cable

Use the following two procedures to test your null modem cable, and verify that it is working properly.

"Loop Back" Test

1. Connect one end of your RS-232 cable to your PC, palm PC, or HPC. Disconnect the other end of the cable from the drive.
2. Connect pin 2 to pin 3 on the drive end of the RS-232 cable.
3. Launch Motion Planner and select "Test Com Port" from the "Communications" menu.
4. If you receive a "Communications OK!" response, your cable is good.
3. Under "options", select "show hex."
4. With pins 2 and 3 at the drive end of your null modem cable *open*, typing "DRES" in the terminal will produce the response "DRES 0A00".
5. With pins 2 and 3 at the drive end of your null modem cable shorted, typing "DRES" in the terminal will produce the response "DRES 0A00 0A00".

If you are continuing to have trouble with communications, proceed to *Verifying a Null Modem Cable*.

Verifying a Null Modem Cable

1. Connect one end of your RS-232 cable to your PC, palm PC, or HPC. Disconnect the other end of the cable from the drive.
2. With no data being transmitted, measure the voltage on the RS-232 cable's transmit pin (should be pin 2). The voltage on the transmit pin should be in the range -3VDC to -12VDC.
3. Measure the voltage on the RS-232 cable's receive pin (should be pin 23). The voltage on the receive pin should be zero volts.
4. Verify that the cable's transmit pin connects to Pin 2 on the Gemini's RS-232/485 connector.

This completes the test.

RS-232 Daisy Chain Guidelines

All drives in an RS-232 daisy chain must be configured as follows:

- Echo must be on (ECHO1)
- Error level must be set to a value greater than Ø. (See ERRLVL command).

RS-485 Multi-Drop Guidelines

All drives in an RS-485 multi-drop must be configured as follows:

- Echo must be off (ECHOØ)
- Error level must be set to either 2 or Ø. (See ERRLVL command).
- Connect RS-485 cables before applying power to the drive.

  (Reconnecting the cables with power applied may cause the drive to interpret intermittent connections as RS-232 hardware handshake signals; this may result in shutdown of the RS-485 interface. If this happens, reset the drive to re-enable the RS-485 interface.)

System Problems

If your Gemini drive is functioning properly, other parts of your system may be causing problems. It may be difficult to identify where the problem is coming from. To diagnose system problems, we recommend that you first have the drive perform its autorun function. Then check the other topics in this section.

Using Autorun Mode to Isolate Problems

In autorun mode, the motor runs open loop—the Gemini drive generates its own internal control signal, and commands the motor to turn clockwise at 1 rps.

Follow these steps to put the drive in autorun mode, which will verify that the drive is functioning properly, and is not the source of the problem.

1. Disconnect the controller from the drive. Disconnect the load from the motor.
2. Perform these procedures from *Chapter 2 Installation*:
   - Connect the Motor (power and feedback)
   - Connect AC Power
   - Configure the Drive

   The final step in "Configure the Drive" is issuing a DMODE13 command, which configures the drive for autorun.
3. Enable the drive by connecting Pin 1 to Pin 2 on the drive's 50 pin DRIVE I/O connector. NOTE: connecting pin 1 to pin 2 may require that you use a breakout module, such as Compumotor's GEM-VM50.
4. Apply AC power.
5. The motor should begin turning clockwise at one revolution per second.

Successful completion of the autorun test indicates that AC power and motor cables are connected correctly, and that the drive is functioning properly. Check the topics below for other sources of problems.

AC Power

Verify that your AC power mains deliver adequate power to the drive's AC power input.

Motor Problems

Verify that the drive is configured properly for the motor you are using. The motor series, frame size, and part number information on a Compumotor motor's name plate should match the settings stored in the drive's memory.

Mechanical System

Shaft Coupler

Verify that the shaft coupler is not slipping during acceleration or deceleration. We recommend bellows or disk style couplers for servo applications. Helical couplers are inadequate, and are *not* recommended.

Mechanical Transmission

Verify that your mechanical system functions properly, and is not jammed.

Motion Problems

If problems occur during motion, check these possible causes:

- Motor Sizing (ensure that the motor has enough torque to perform the move)
- Excessive Acceleration or Deceleration
- Excessive Velocity

Electrical Noise

Electrical noise on input or output lines can cause stop or kill inputs to activate unexpectedly. See *Appendix C: Regulatory Compliance* for installation guidelines on reducing electrical noise.

Software/Motion Program Problems

Check to see that your motion programs are functioning properly, and are not causing unexpected problems.

APPENDIX A

Specifications

IN THIS APPENDIX

- Gemini Drive Specifications
- Input/Output Specifications
- Dimensions
- Protective Circuits
- Cable Specifications

Power Specifications

Input Power

AC

Drive	AC Input Range
GT-L5	95VAC – 132VAC, 50/60 Hz, single phase
GT-L8	95VAC – 132VAC, 50/60 Hz, single phase
GT-U5	95VAC – 132VAC and 190VAC – 264VAC, 50/60 Hz, single phase
GT-U8	95VAC – 132VAC and 190VAC – 264VAC, 50/60 Hz, single phase

Connector

Drive connector: #8 (M4) screw terminals.

Mating terminals: spade fork, 0.325” maximum width

CAUTION

Do not operate GT-U5/8 in the 132VAC – 190VAC range, or the drive will be permanently damaged.

CAUTION

You must connect V DBL to L2/N on GT-U5/8 to enable the voltage doubler for 120VAC operations.

CAUTION

Do not operate GT-L5/8 above 132VAC, or the drive will be permanently damaged.

+24VDC “Keep Alive” Power

Input voltage range: 19.2 – 28.8 VDC

Input current: 500 mA (maximum)

Output Power

Drive	Output Current (amps, peak)	Output Voltage (motor bus) (DC, rms)
GT-U5	5.0	74
GT-U8	7.5	74
GT-L5	5.0	170
GT-L8	8.0	170

Connector

Drive connector: #8 (M4) screw terminals.

Mating terminals: spade fork, 0.325” maximum width

Interface/Communication

Connector

Drive connector:	9 pin D-subminiature plug.
Mating connector:	9 pin D-subminiature receptacle

RS-232:	**RS-485:***
Rx, Tx, Gnd	4-wire plus ground (Rx+, Rx-, Tx+, Tx-, Gnd)
9600 baud	9600 baud
8 data bits	8 data bits
1 stop bit	1 stop bit
no parity	no parity
full duplex	full duplex
	*twisted pair cabling recommended (e.g. Belden 9842)

Performance

Accuracy: ±5 arc min (0.0833°), typical unloaded bi-directional with Compumotor motors. Other motors may have different absolute accuracy.

±1 arc minute (0.0167°), loaded in addition to unloaded accuracy, per each frictional load equal to 1% rated torque.

Repeatability: ±5 arc sec (0.0014°), typical unloaded one revolution returning to starting point from same direction

Hysteresis: Less than 2 arc min (0.0334°) unloaded bi-directional

Resolution: User definable integer value between 200 and 128,000 steps per revolution

Waveform: -20% through 10%, 0.01% resolution, continuously variable, 3rd harmonic, (use DWAVEF command)

Amplifier

Type: 20 kHz fixed frequency, variable duty cycle PWM, current controlled, recirculating, bipolar type, MOSFET construction.

2 Phases: bipolar motor configuration only.

Auto Standby: When enabled, motor current reduces to a percentage of present value (defined by DAUTOS command), when no step pulses are received for one second. Default is disabled (no current reduction). See DAUTOS command.

Environmental Specifications

Operating Temperature:	Still Air:	45°C (113°F) maximum
	Moving air:	50°C (122°F) maximum
	Minimum:	0°C (32°F)
Storage Temperature:	-40°C – 85°C (-40°F – 185°F)	
Humidity:	0 – 95%, non-condensing	
Shock:	15g, 11msec half sine	
Vibration:	10 – 2000 Hz at 2g	

Standards

UL, cUL	508C	
CE for LVD	72/23/EEC	
	BS EN61010-1:1993/A2:1995 (ie includes 1995 amendment AMD 8961) Safety requirements for electrical equipment for measurement, control, and laboratory use	Part 1. General requirements
CE for EMC	89/336/EEC	
	BS EN61800-3: 1997	Adjustable speed electric power drive systems Part 3. EMC product standard including specific test methods.
	IEC 61800-3: 1996	Adjustable speed electric power drive systems Part 3. EMC product standard including specific test methods.

Inputs and Outputs

This section describes all inputs and outputs (I/O) located on the 50 pin DRIVE I/O connector. Not all are required for your system to operate. The next drawing summarizes which are required, and which are optional.

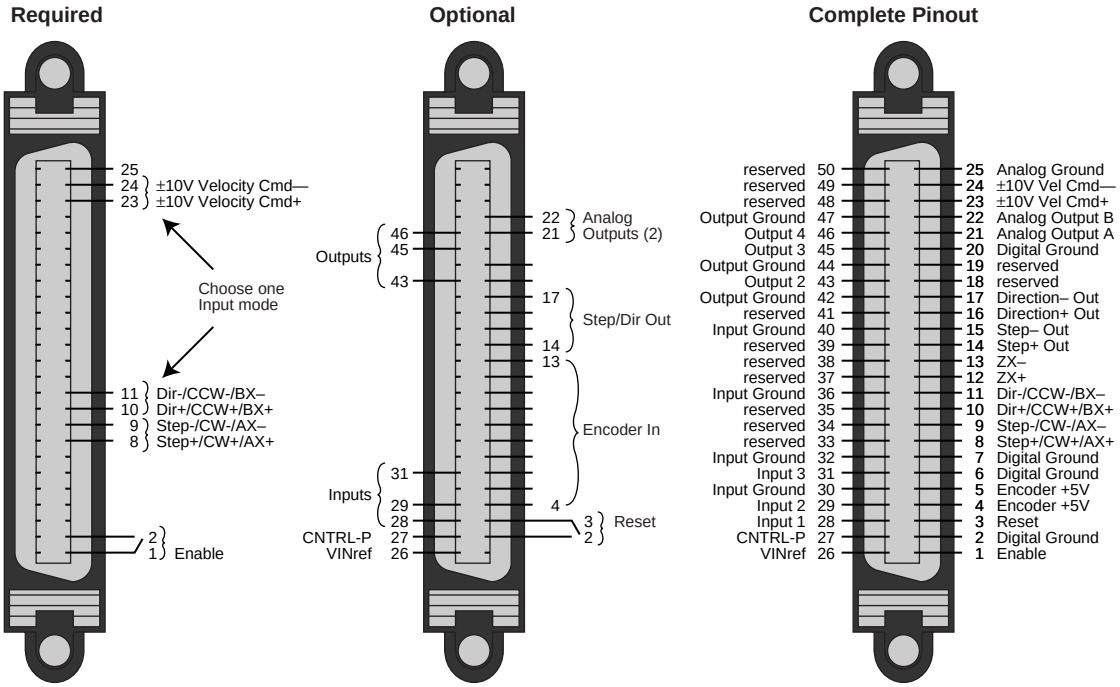

Drive I/O Connector

Connector specifications are:

	Gemini Drive:	**Mating Connector* (not provided; see note):**
Manufacturer:	AMP	AMP
Connector Type:	CHAMP .050 Series II	CHAMP .050 Series II
AMP Part Number:	2-178238-7	2-175677-7
Wire Gauge:	not applicable	use 28 AWG (0.08 mm^2)

* Note: Mating connectors are not provided with Gemini drives; Compumotor cables are available with mating connectors attached. If you make your own cables, you must use a “jack screw” style fastener, not “spring clip” style. For connector integrity, we recommend you use AMP brand connectors.

Command Input (required)

The Gemini drive can accept several types of command input signals. Use the DMODE command to configure your drive to accept either a pulse input (step/direction, clockwise/counterclockwise, or encoder), or ±10V velocity command.

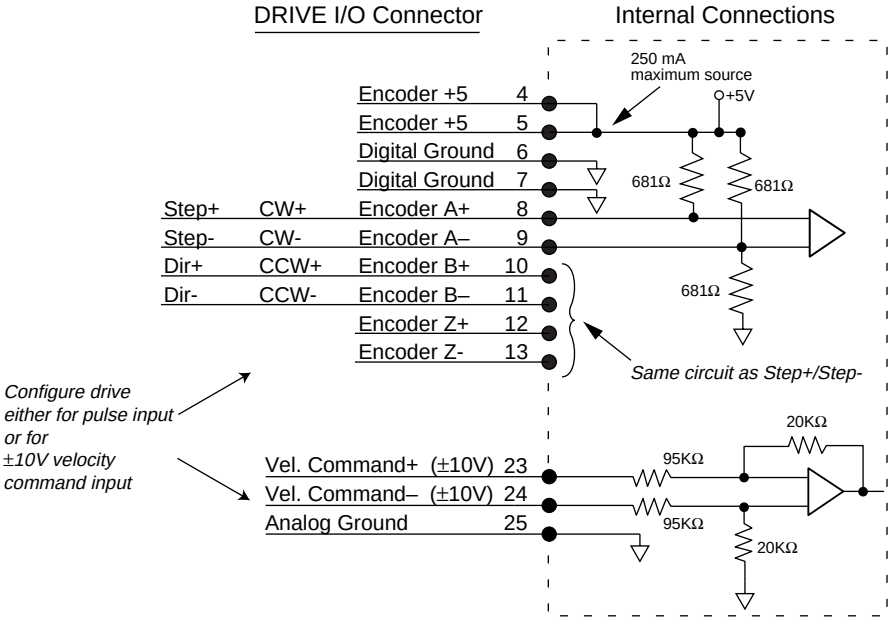

Command Inputs

If you use a pulse source to generate step/direction, CW/CCW or encoder tracking signals, note that the drive's pulse inputs use differential receivers without opto-couplers. For best performance, follow these instructions:

Connection Instructions for Pulse inputs

1. Connect your control's logic ground to the Gemini's ground, pin 6 or 7. This connection ensures that the signals stay within the common mode range of the differential receivers, and must not be omitted.
2. If you use a Compumotor 6K Controller, use the step and direction command cable. See *Cable Specifications* later in this appendix for part numbers.

If you use ±10V velocity command input signals, follow these instructions:

Connection Instructions for ±10V Velocity Command Inputs

1. Connect COMMAND+ to pin 23.
2. Connect COMMAND- to pin 24.
3. Connect your controller's analog ground reference to pin 25.
4. Use the flying lead cable to connect the 50 pin DRIVE I/O connector to your controller. See *Cable Specifications* later in this appendix for part numbers.

Enable Input (required)

To enable the drive and energize the motor, you must connect the enable input (pin 1) to digital ground (pin 2). The next drawing shows the internal circuit.

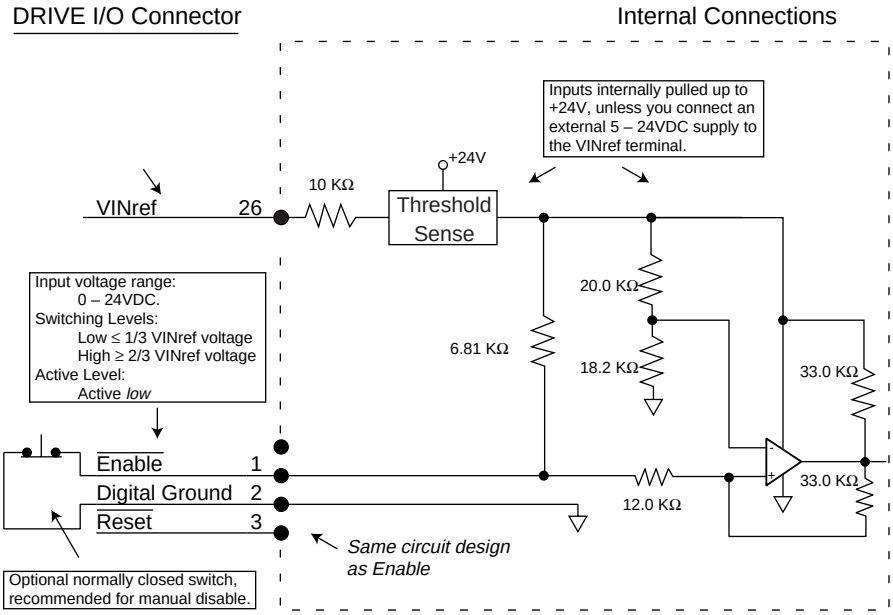

Enable Input and Reset Input

Reset Input (optional)

The reset and enable inputs use the same circuit design, as the drawing above shows. To reset the drive, temporarily connect the reset input (pin 3) to digital ground (pin 2). Reset begins when pin 3 is grounded. The drive will begin its power up sequence upon disconnection of pin 3 from ground.

VINref – Voltage Input Reference (optional)

Use VINref (pin 26) to set the input reference voltage for the enable, reset, and digital inputs.

It is not necessary for you to make connections to VINref. If you connect nothing, then the enable, reset, and inputs are internally pulled up to +24VDC. This is the factory default condition.

If you connect an external 5 – 24VDC power supply to VINref, then the input switching thresholds become:

Low ≤ 1/3 ∗ VINref

High ≥ 2/3 ∗ VINref

(Default, with VINref at internal +24VDC: Low < 8V; High > 16V)

Digital Inputs (optional)

The Gemini drive has three digital inputs. Their functions are:

Input 1	Positive Limit Input
Input 2	Negative Limit Input
Input 3	User Fault Input

By default, these are +24VDC sourcing inputs. You can use VINref (pin 26) to change the switching voltage level. You can also use CNTRL-P (pin 27) to change the inputs from sourcing to sinking inputs. All connections are shown in the next drawing.

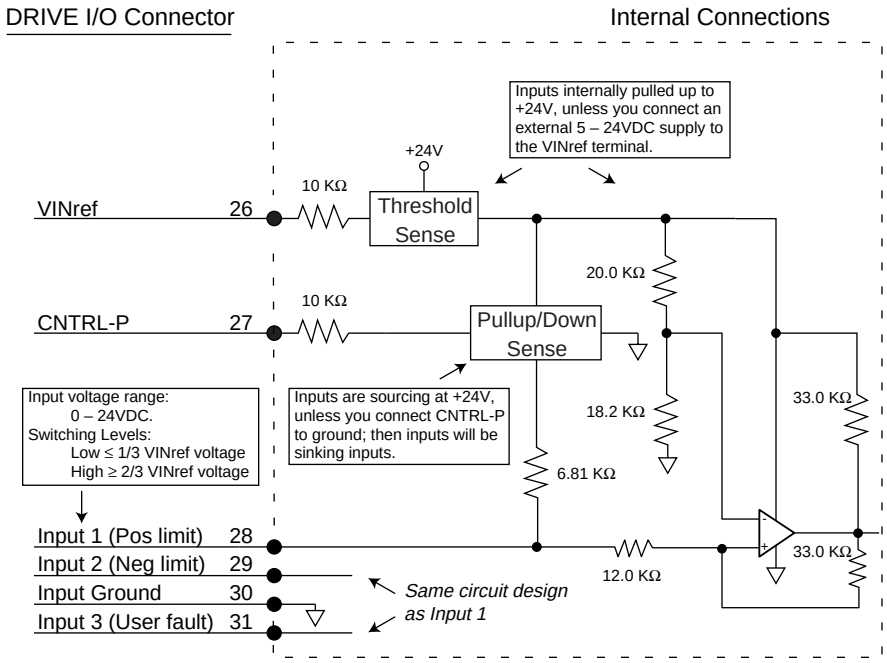

Inputs

You can use the INLVL and INDEB commands to configure the inputs as active high or active low, and to set the debounce time, respectively.

CNTRL-P – Reference for Digital Inputs (optional)

Use CNTRL-P (pin 27) to change the digital inputs from sourcing inputs to sinking inputs.

It is not necessary for you to make any connections to CNTRL-P. If you connect nothing, then the inputs are internally pulled up to VINref. If sourcing inputs are appropriate for your application, then make no connections to CNTRL-P.

If you connect CNTRL-P (pin 27) to digital ground (pin 30), then the inputs will become sinking inputs, and will sink current.

Digital Outputs (optional)

The Gemini drive has three digital outputs. Their functions are:

Output 2*	Drive Fault Output
Output 3*	At Limit
Output 4*	Position Error Output

* For compatibility with other Compumotor products, the outputs are numbered 2, 3 and 4, rather than 1, 2 and 3.

All connections are shown in the next drawing.

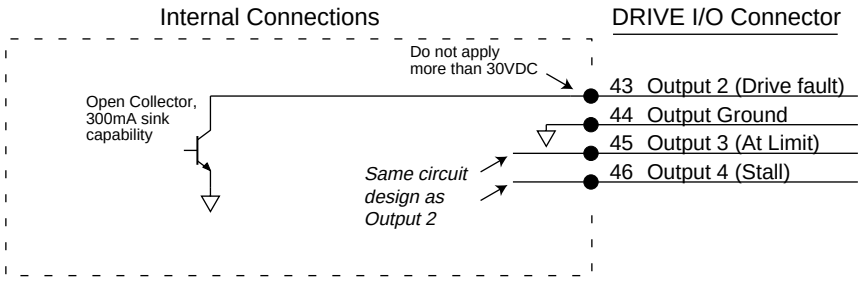

Outputs

You can use the OUTLVL command to configure each of the outputs as active high or active low.

Step & Direction Output (optional)

Pins 14 – 17 are step and direction outputs.

They are derived from incoming command pulses (step/direction, CW/CCW, or encoder inputs). The outputs are based on calculated position.

Step & Direction Output Specifications:

Default Resolution:	25,000 steps per revolution
Clockwise Rotation:	Direction+ = High
Counterclockwise Rotation:	Direction+ = Low

The step and direction output circuit is shown in the next drawing.

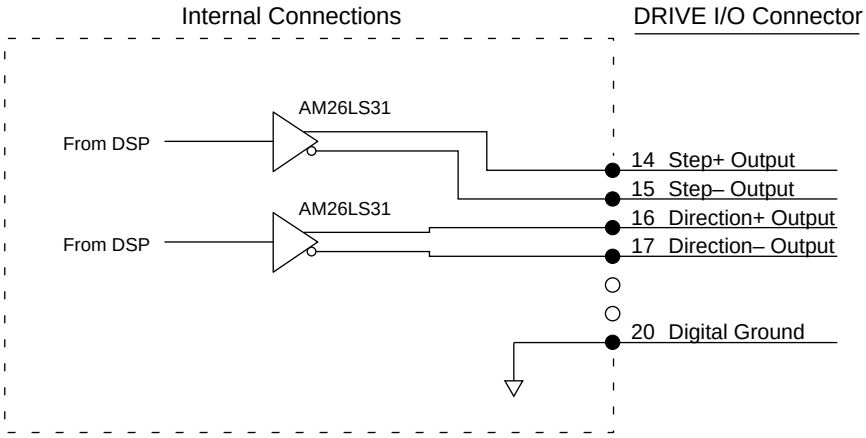

Step & Direction Output

You can use the ORES command to configure the step and direction outputs.

Analog Monitor (optional)

Two analog monitor outputs are available on pins 21 and 22. Use pin 25 as a ground reference for these monitors.

Analog Monitor Specifications:

Maximum Output:	±10V (scalable; use DMON command)
Resolution:	8 bits peak to peak (for full scale signal)

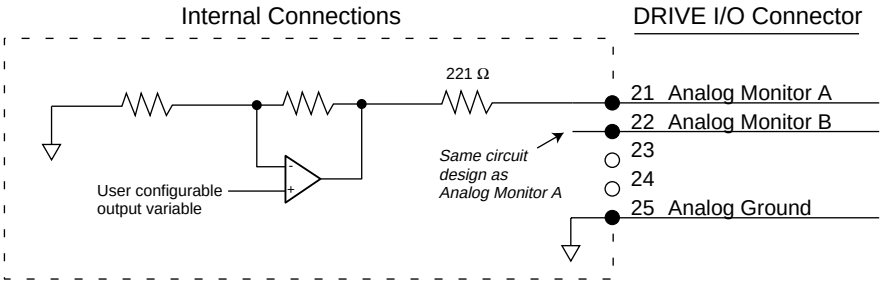

Analog Monitors

You can configure the analog outputs to monitor many different variables, such as current, velocity, temperature, etc. You can also scale the outputs. See the DMON commands in *Chapter 3 Configuration* and the *Gemini Programmer's Reference* for more information.

WARNING

Do not use Analog Monitors as control signals. Because of offsets, limited resolution and accuracy, use the analog monitor outputs only for oscilloscope monitoring.

Connecting Feedback Devices

Gemini GV servo products use the 26 pin MOTOR FEEDBACK connector. The Gemini GT step motor drive does not use the MOTOR FEEDBACK connector. You do not need to make connections to this connector.

Dimensions

Drive Dimensions

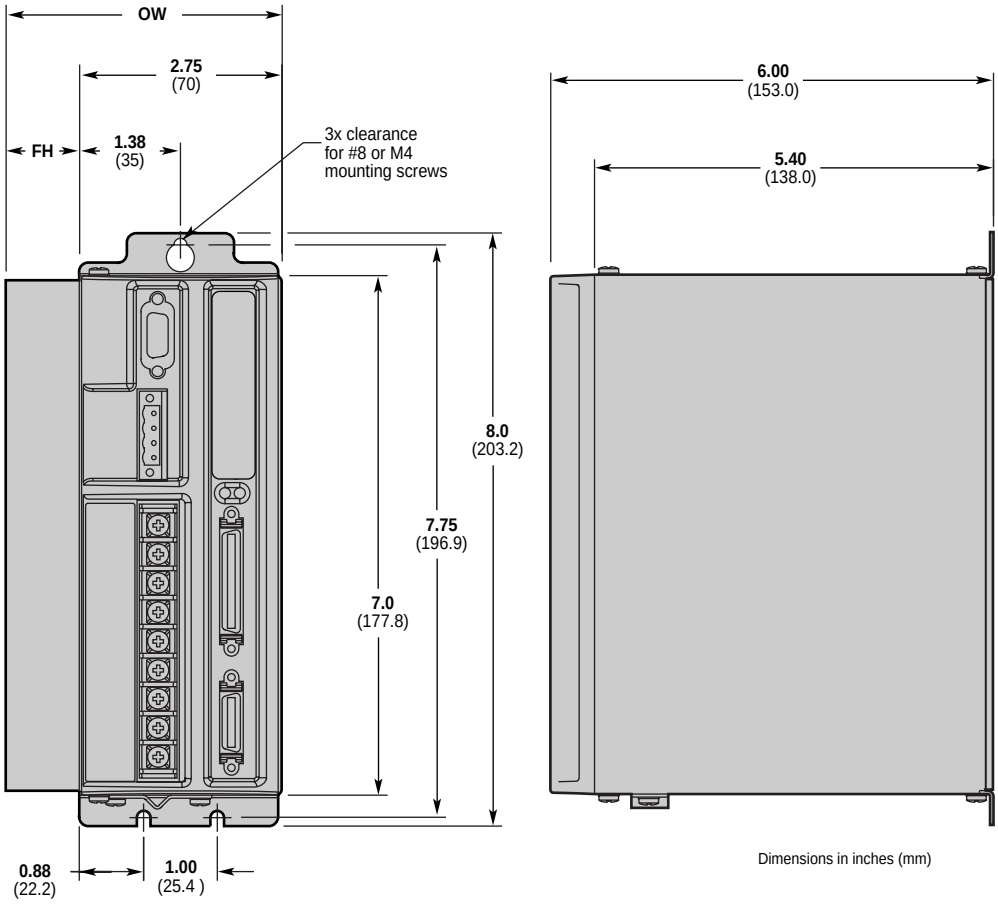

Product	OW Overall Width inches (mm)	FH Fin Height inches (mm)
GT-L5	**3.13** (79.4)	**0.38** (9.5)
GT-L8	**3.75** (95.3)	**1.00** (25.4)

Drive Dimensions (Shorter Enclosure)

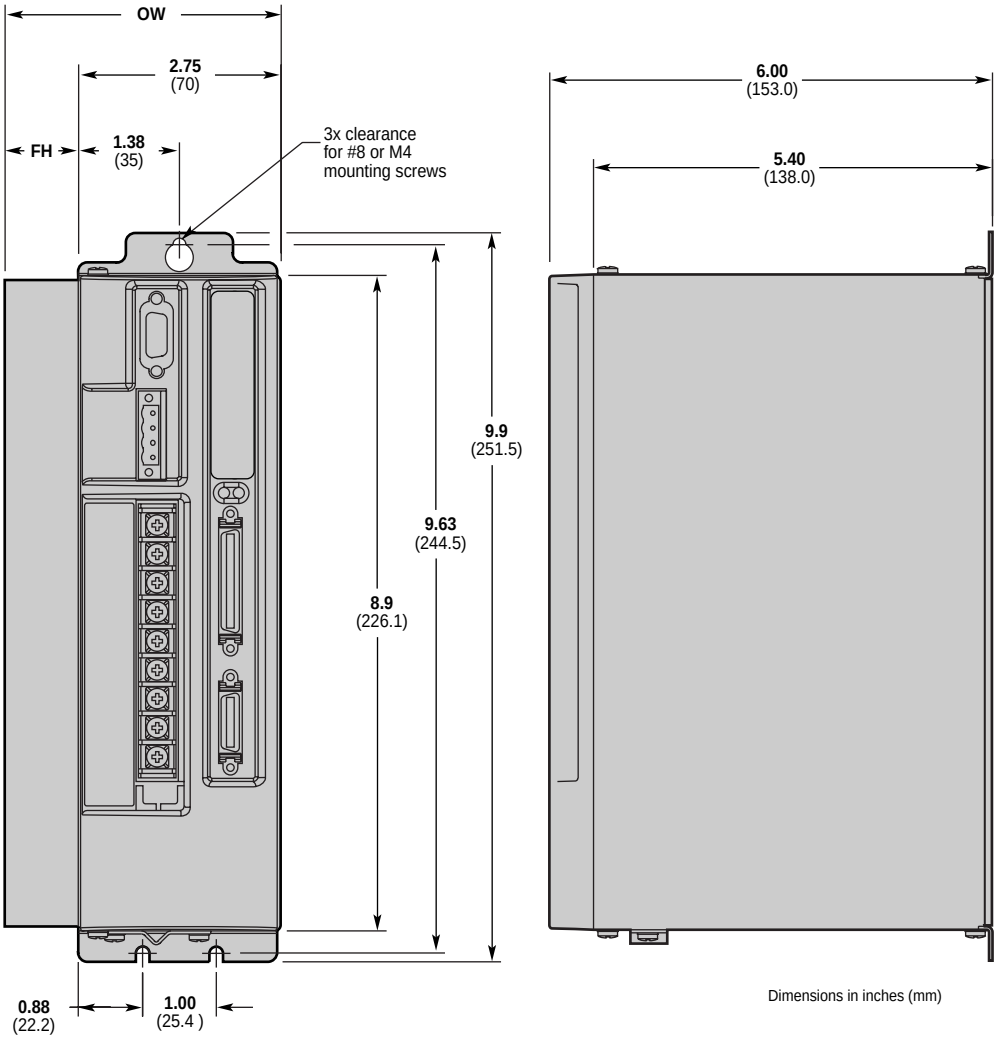

Product	OW Overall Width inches (mm)	FH Fin Height inches (mm)
GT-U5	**3.13** (79.4)	**0.38** (9.5)
GT-U8	**3.75** (95.3)	**1.00** (25.4)

Drive Dimensions (Taller Enclosure)

Drive Mounting

The Gemini drive is a vented product. Mount it under an overhang to prevent material spilling into the drive.

Panel Layout Dimensions

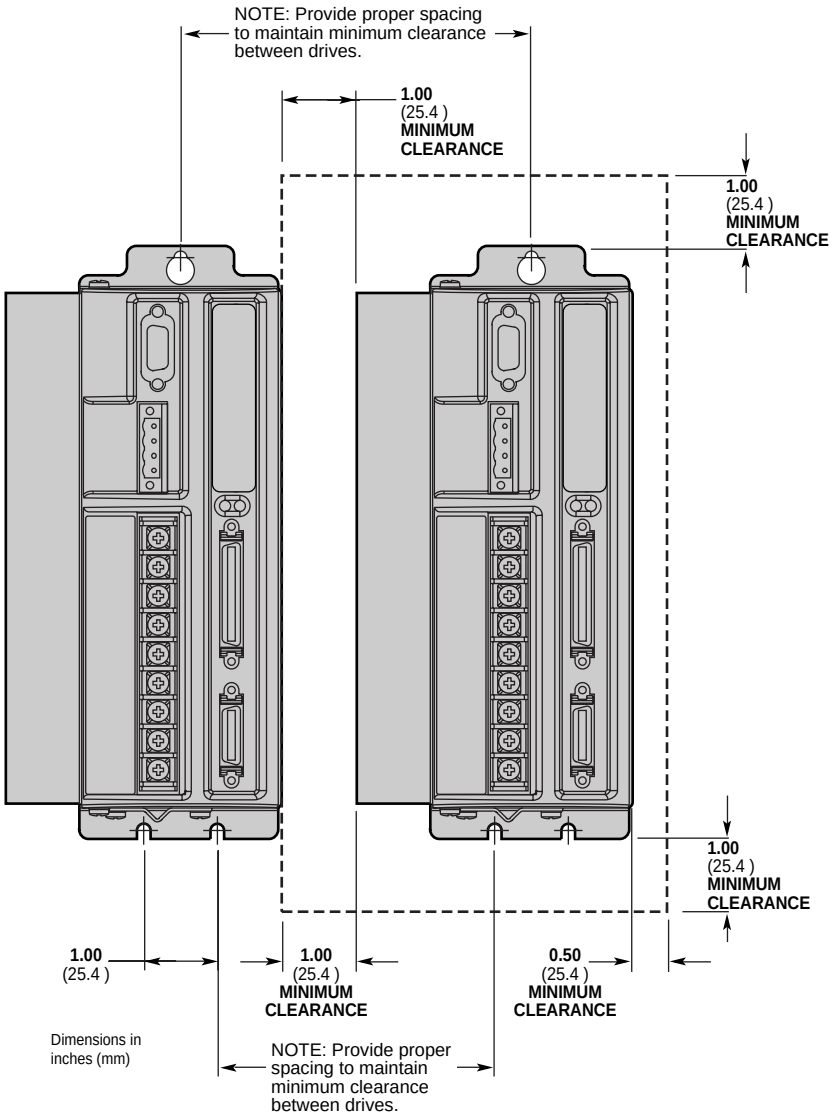

Panel Layout Dimensions

Protective Circuits

Short Circuit Protection

The Gemini drive has an internal circuit that protects it from short circuits between one motor terminal to another (phase to phase), or from any motor terminal to earth. A short circuit fault is a latched fault.

Causes of Fault:	Phase to phase short circuit
	Phase to earth short circuit
Results of Fault:	Power to motor is turned OFF
	LEDs: Left = illuminated RED; Right = off
	Fault output is activated
	Latched fault

Inrush Current Protection

The Gemini drive has internal circuitry that protects it from high inrush current when power is initially applied to the drive. The circuitry works automatically.

Drive	Inrush Current Limiter (ohms):	Current limiter bypassed with shorting relay:
GT-L5	5Ω	yes
GT-L8	5Ω	yes
GT-U5	5Ω	no
GT-U8	5Ω	no

GT-L5/8 drives have a shorting relay that removes the inrush current limiter after drive startup. This allows maximum bus voltage in high acceleration/peak torque/ maximum speed applications.

Operation is temperature dependent:

Ambient Temperature:	Inrush Current Limit:
25°C (77°F)	less than 35 amps
50°C (122°F)	less than 70 amps

Drive Overtemperature Protection

The drive overtemperature circuit monitors the drive's internal temperature sensors. If the sensors exceed the threshold temperature, the drive issues an overtemperature fault.

Threshold Temperature:	80°C (176°F)
Results of Fault:	Power to motor is turned OFF
	LEDs: Left = illuminated RED; Right = off
	Fault output is activated
	Latched fault

Undervoltage Protection

The Gemini drive's undervoltage protection circuit monitors AC input voltage. If input voltage falls below 75VAC while the drive is operating, the drive issues an undervoltage fault, and turns off power to the motor.

Undervoltage protection has the following features:

Threshold Voltage:	Voltage falling below 75VAC trips fault
Results of Fault:	Power to motor is turned OFF
	LEDs: Left = illuminated RED; Right = off
	Fault output is activated
	Latched fault

Regeneration Protection

The Gemini drive's regeneration circuit protects it from *regenerated* energy—excess energy from the load during deceleration.

NOTE: Regeneration for an extended period of time can cause a regeneration fault.

Regeneration Protection Specifications

Drive	Continuous Dissipation (watts):	Activation Conditions:
GT-L5	24W	Turn on at 215VDC; turn off at 208VDC
GT-L8	24W	Turn on at 215VDC; turn off at 208VDC
GT-U5	10W	Turn on at 92VDC; turn off at 83VDC
GT-U8	10W	Turn on at 92VDC; turn off at 83VDC
Results of Fault:	Power to motor is turned OFF	
	LEDs: Left = illuminated RED; Right = off	
	Fault output is activated	
	Latched fault	

Cable Specifications

This section contains specifications for Compumotor cables and cabling accessories you can use with Gemini drives.

CE Cables

Many Compumotor cables are *CE Cables*. If installed according to instructions in *Appendix C Regulatory Compliance: UL and CE*, these cables are designed to aid the user in gaining European Compliance, and are thus an integral part of a CE system solution. CE cables add RF screening and bonding to reduce emissions, and provide high integrity safety Earth bonding. They also help to reduce problems in high electrical noise environments.

Step and Direction Command Cable

If you operate the drive in step and direction mode, use this cable to connect the Gemini drive to a Compumotor 6K controller.

Part Number: 71-016966-10

CE Cable: Yes, if installed according to instructions in *Appendix C*

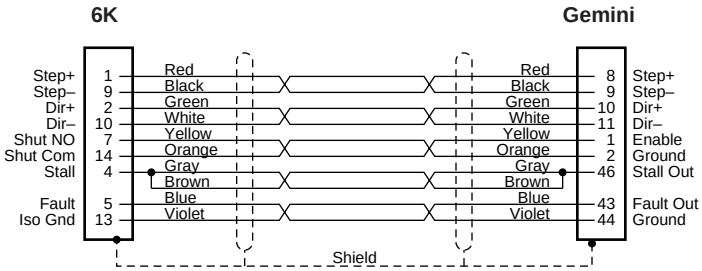

Cable – Step and Direction – Color Code

Gemini 50 Pin Connector to Flying Leads Cable

Use this cable to connect the Gemini drive's 50 pin connector to a Compumotor 6200, AT6n00, or non-Compumotor indexers/controllers.

Part Number: 71-016943-10

CE Cable: Yes, if installed according to instructions in *Appendix C*

Compumotor 6200, AT6n00 Connections

The next drawing shows connections to a Compumotor 6200 or AT6n00 indexer.

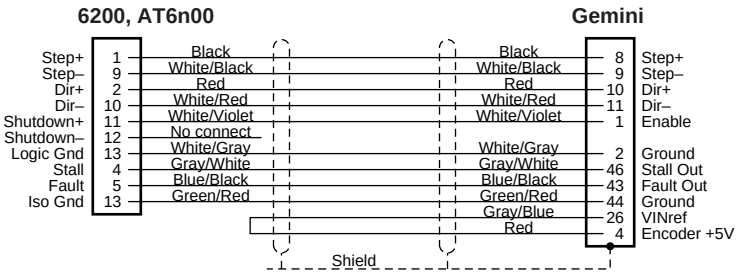

Cable – Flying Leads – 6200 Connections

NOTE: If using Compumotor 6000 Series stepper products, connect Gemini VINref (pin 26) to +5VDC, such as Gemini ENCODER +5 (pin 4 or 5). Do not connect Gemini VINref to any voltage higher than +5VDC.

Flying Lead Cable – Color Code

The next drawing shows the color code for the 50 pin connector/flying lead cable.

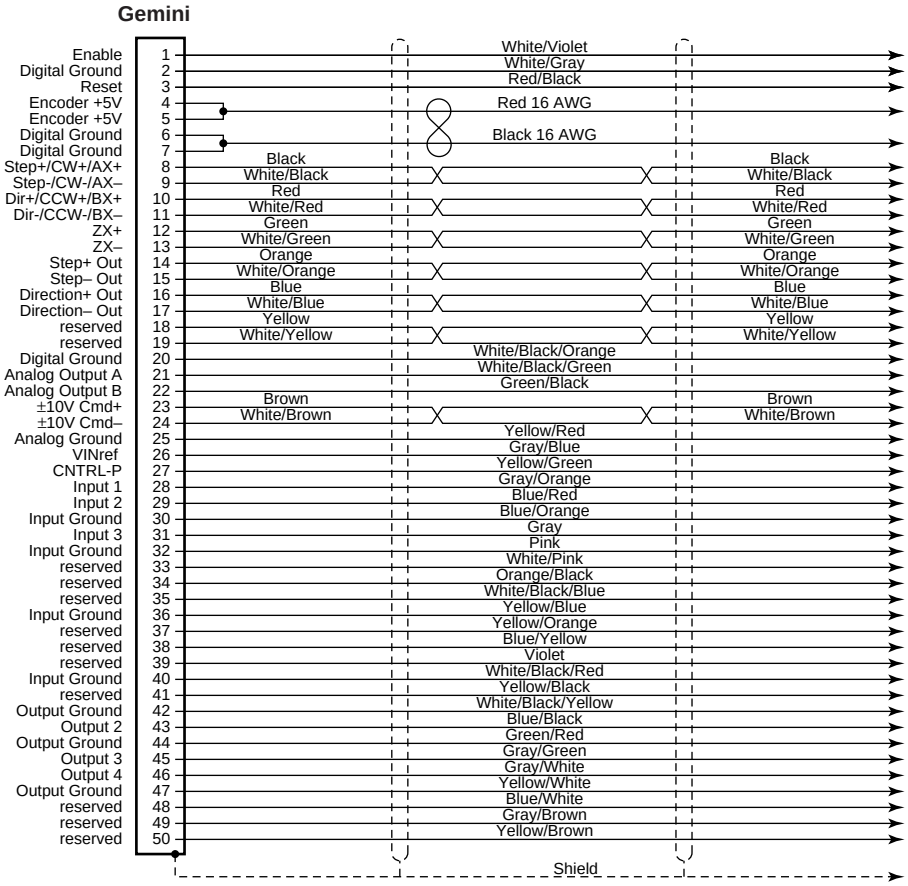

Cable – Flying Leads

Gemini 50 Pin Connector to 50 Pin D-Connector Cable

Use this cable to connect the Gemini drive's 50 pin DRIVE I/O connector to the 50 pin D-connector on the Gemini 50 pin breakout module (GEM-VM50).

Part Number:	71-016945-03
CE Cable:	Yes, if installed according to instructions in *Appendix C*

This cable has the same pinout and color code as the flying lead cable; instead of flying leads, it has a 50 pin D-connector on the end.

Gemini GEM-VM50 – 50 Pin Breakout Module

Use the 50 pin breakout module for access to individual terminals on the 50 pin DRIVE I/O connector. The GEM-VM50 includes the cable above.

Description:	**Part Number:**
50 pin Breakout Module (with Cable)	GEM-VM50
50 pin Breakout Module (without cable)	01-016986-01

Null Modem Cable – 9 Pin D-Connector to 9 Pin D-Connector

Use this cable for RS-232 communications between the Gemini drive and a terminal. Note that this is not a “straight-through” cable; pins 2 and 3 are crossed, making it a “null-modem” cable.

Part Number:	71-016939-10
CE Cable:	Yes, if installed according to instructions in *Appendix C*
Connector:	9 pin female D-subminiature connector on each end

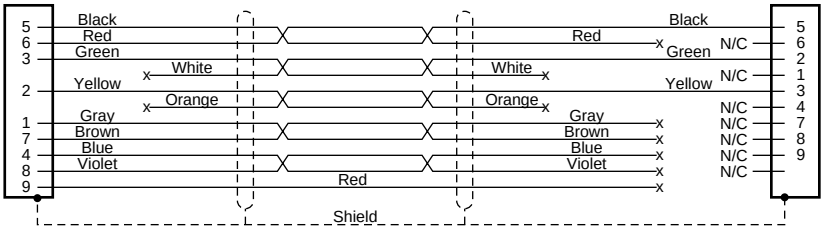

Cable – RS-232 Null Modem

Gemini GC-50 – 50 Pin Connector

The Gemini GC-50 is a 50 pin breakout module that connects directly to the 50 pin DRIVE I/O connector. Dimensions are shown below.

CAUTION

Connect wires to the GC-50 *before* installing it in the Gemini drive. This will avoid damage that may be caused by wiring the GC-50 while it is attached to the drive.

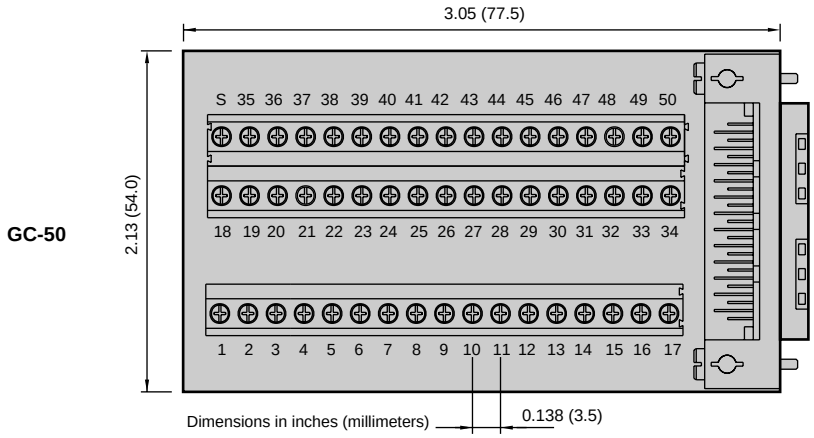

GC-50 Dimensions

APPENDIX B

Using Non-Compumotor Motors

IN THIS APPENDIX

- Commands for Motor Configuration
- Wiring and Connections: 4-, 6-, and 8-lead motors
- Setting Motor Current and Drive Gains

Commands for Configuration

If you use a non-Compumotor motor, you must configure the drive for your motor by setting values for all commands in the following table. Also see the *Motor Parameters* table on the *Motion Planner CD-ROM* for examples of recommended drive configuration settings for Compumotor motors.

Commands for Motor Configuration

Command	Description
DMTSTT	static torque
DMTIC	continuous current
DMTIND	inductance
DMTRES	phase resistance
DMTJ	rotor inertia
DPOLE	number of pole pairs
DIGNA*	current loop gain
DIGNB*	current loop gain
DIGNC*	current loop gain
DIGND*	current loop gain

*See the *Gemini Series Programmer's Reference* for instructions on calculating DIGN values

Use Motion Planner or Pocket Motion Planner to enter these command settings into the drive's memory.

Motor Requirements

We recommend that you use Compumotor motors with the Gemini drive. If you use a non-Compumotor motor, it must meet the following requirements:

- Inductance: minimum: 0.5 mH
  recommended: 5.0 – 50.0 mH
  maximum: 100.0 mH
- A minimum of 500VDC high-pot insulation rating from phase-to-phase and phase-to-ground.
- The motor must be designed for use with a bipolar drive (no common center tap).
- The motor must not have riveted rotors or stators.
- Do not use solid rotor motors.
- Test all motors carefully. Verify that the motor temperature in your application is within the system limitations. *The motor manufacturer's maximum allowable motor case temperature must not be exceeded.* You should test the motor over a 2-to-3 hour period. Motors tend to have a long thermal time constant, but can still overheat, which results in motor damage.

CAUTION

Consult your motor vendor to verify that your motor meets the above specifications. Consult your Automation Technology Center (ATC) if you have questions regarding the use of a non-Compumotor motor with Compumotor equipment.

Wiring Configurations

Refer to the manufacturer's motor specification document to determine the motor's wiring configuration. You can also determine the wiring configuration with an ohmmeter using the procedures below (*4-Lead Motor*, *6-Lead Motor*, *8-Lead Motor*). Once you determine the correct motor wiring configuration, use the terminal connection diagram, shown at the end of this section, that applies to your configuration.

4-Lead Motor

1. Label one motor lead **A+**.
2. Connect one lead of an ohmmeter to the **A+** lead and touch the other lead of the ohmmeter to the three remaining motor leads until you find the lead that creates continuity. Label this lead **A–**.
3. Label the two remaining leads **B+** and **B–.** *Verify that there is continuity between the* **B+** *and* **B–** *leads.*
4. Proceed to the *Terminal Connections* section below.

6-Lead Motor

1. Determine, with an ohmmeter, which three of the six motor leads are common (one phase).
2. Label each one of these three motor leads **A**.
3. Using the ohmmeter, verify that the remaining three leads are common.
4. Label the remaining three leads **B**.
5. Set the ohmmeter range to the 100 ohm scale (approximately).
6. Connect the ohmmeter's negative lead to one of the motor leads labeled **A**. Alternately measure the resistance to the two remaining motor leads also labeled **A**. The resistance measurements will reflect one of the following two scenarios.

   Scenario #1 — The resistance measurements to the two remaining motor leads are virtually identical. Label the two remaining motor leads **A+** and **A–**. Label the motor lead connected to the negative lead of the ohmmeter **A CENTER TAP** (this is the center tap lead for Phase A of the motor).

   Scenario #2 — The resistance measurement to the second of the three motor leads measures 50% of the resistance measurement to the third of the three motor leads. Label the second motor lead **A CENTER TAP** (this is the center tap lead for Phase A of the motor). Label the third motor lead **A–**. Label the motor lead connected to the ohmmeter **A+.**
7. Repeat the procedure as outlined in step 6 for the three leads labeled **B** (**B CENTER TAP** is the center tap lead for Phase B of the motor).
8. Proceed to the *Terminal Connections* section below.

8-Lead Motor

Because of the complexity involved in phasing an 8-lead motor, you must refer to the manufacturer's motor specification document. Using the manufacturer's specifications, label the motor leads as shown in the next drawing.

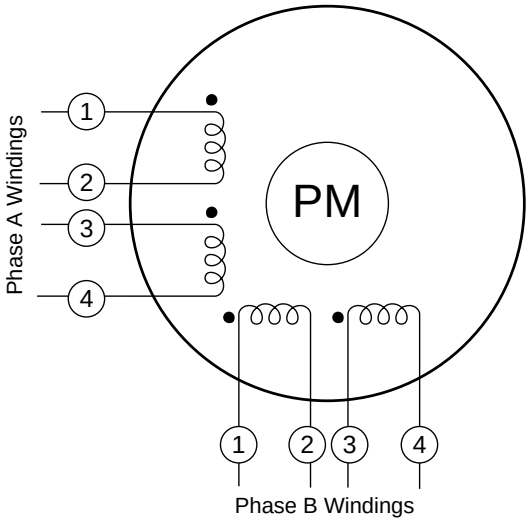

8-Lead Motor – Labeling the Leads

You can configure the 8-lead motor in series or parallel.

Series Configuration Use the following procedure for series configurations.

1. Connect A2 & A3 together and relabel this common point **A CENTER TAP.**
2. Connect B2 & B3 together and relabel this common point **B CENTER TAP.**
3. Relabel the A1 lead **A+**.
4. Relabel the A4 lead **A–**.
5. Relabel the B1 lead **B+**.
6. Relabel the B4 lead **B–**.
7. Proceed to the *Terminal Connections* section below.

Parallel Configuration Use the following procedure for parallel configurations.

1. Connect motor leads A1 & A3 together and relabel this common point **A+**.
2. Connect motor leads A2 & A4 together and relabel this common point **A–**.
3. Connect motor leads B1 & B3 together and relabel this common point **B**+.
4. Connect motor leads B2 & B4 together and relabel this common point **B**–.
5. Proceed to the *Terminal Connections* section below.

Terminal Connections

After you determine the motor's wiring configuration, connect the motor leads to the Gemini drive's **MOTOR** connector according to the following figure.

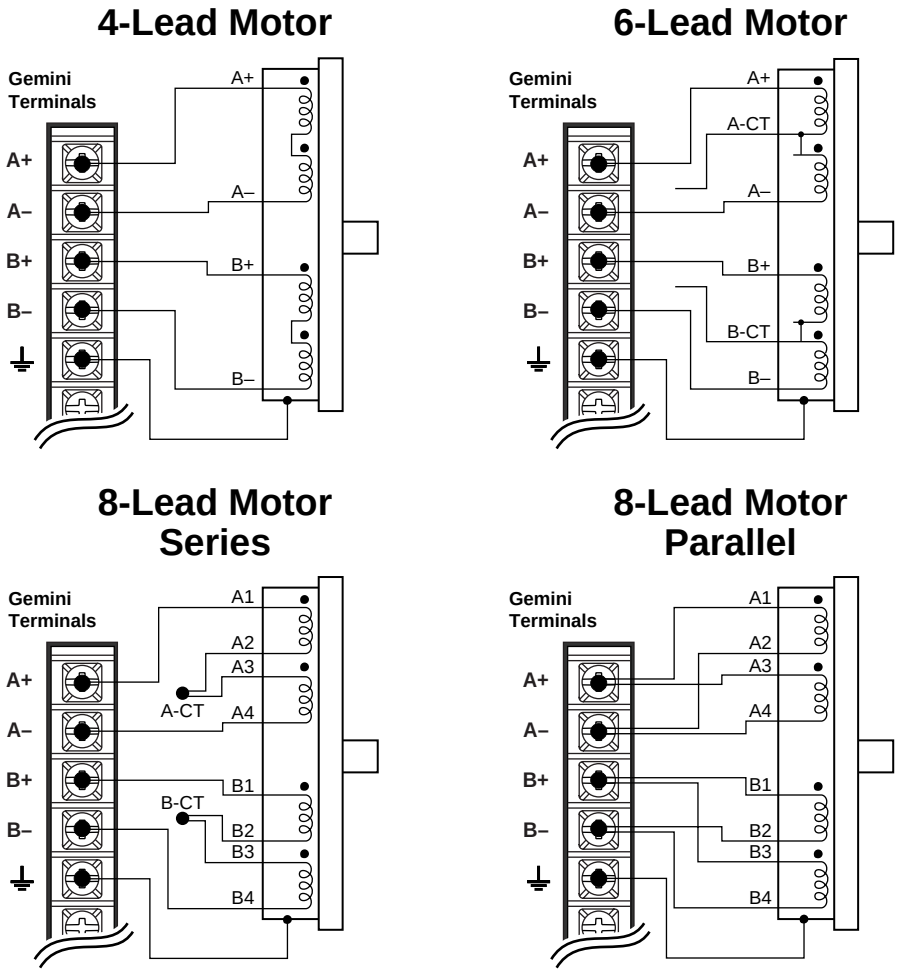

Non-Compumotor Motor Connections

Direction of Motor Rotation

The procedures above do not determine the direction of motor shaft rotation. To find out which direction the shaft turns, you must power up your system and command motion. If the shaft turns in the opposite direction than you desire, exchange the motor leads connected to **A+** and **A–** to reverse the direction of rotation.

WARNING

Motor shaft rotation may be opposite than you expect. Do not connect a load to the shaft until you first determine the direction of shaft rotation.

Autorun Mode, described in *Chapter 2 Installation*, provides a simple method of determining motor shaft rotation. Autorun causes the shaft to rotate in the clockwise (positive) direction, if the motor wires are properly connected. A controller is not required for autorun.

Setting Motor Current – Non-Compumotor Motors

To set motor current for a non-Compumotor motor, refer to the formulas below that correspond to your motor (4-lead, 6-lead, 8-lead) and use the DMTIC command to set the motor's current.

NOTE: Gemini *drive* specifications for output current are in amps *peak*. Most motor current specifications are in amps *rms*. The DMTIC command uses amps rms; *do not use amps peak with the DMTIC command*.

WARNING

Do not connect or disconnect the motor with the power on. Doing so will damage the contacts of the motor connector and may cause personal injury.

4-Lead Motors

If you use a 4-lead motor, the manufacturer's current specification will translate directly to the value you should enter with the DMTIC command.

6-Lead Motors

Manufacturers generally use either a bipolar rating or a unipolar rating for motor current in 6-lead motors.

Bipolar Rating: If the manufacturer specifies the motor current as a bipolar rating, you can use the DMTIC command directly to set motor current—no conversion is required.

Unipolar Rating: If the manufacturer specifies the motor current as a unipolar rating:

- Use the following formula to convert the unipolar current rating to the correct bipolar rating:

  Unipolar Current ∗ 0.707 = Bipolar Current

- Use the converted value and the DMTIC command to set the motor current.

8-Lead Motors

Manufacturers generally use either a bipolar rating or a unipolar rating for motor current in 8-lead motors.

Bipolar Rating: If the manufacturer specifies the motor current as a bipolar series rating:

- If you wire the motor in **series**, use the DMTIC command directly.
- If you wire the motor in **parallel**, you must double the manufacturer's rating and then use the DMTIC command to set the motor current.

Unipolar Rating: If the manufacturer specifies the motor current as a unipolar rating:

- Use the following formula to convert the unipolar current rating to the correct bipolar rating:

  Unipolar Current * 0.707 = Bipolar Current
- If you wire the motor in **series**, use the converted value and the DMTIC command to set the motor current.
- If you wire the motor in **parallel**, you must **double** the converted value and use the DMTIC command to set the motor current.

If you have questions about setting motor current, call Compumotor's Applications Engineering Department at the number listed inside the front cover of this user guide.

Setting Gains – Non-Compumotor Motors

If you use a non-Compumotor motor, you must use the DIGN command to manually set the gain terms for the stepper current loop. Setting the gain terms correctly will optimize drive performance for your specific motor. See the description of the DIGN command in the *Gemini Programmer's Reference* for instructions.

APPENDIX C

Regulatory Compliance: UL and CE

IN THIS APPENDIX

- Installation Instructions
- Installation Guidelines
- System Installation Techniques

Regulatory Agencies

The Gemini family of products is designed to meet the requirements of global regulatory agencies.

Gemini products have shown compliance with the regulatory agencies in the following list. The list also shows additional steps users must take to ensure compliance.

Agency	Additional Steps User Must Take
UL, cUL	Mains fuses
CE (LVD)	Mains fuses; earth connection for drive and motor (if applicable)
CE (EMC)	Varistors, mains filter, EMC cabling, EMC ready motor, proper installation

Installation Instructions

Although Gemini drives are technically considered motion control components and are therefore not within the scope of the European union's CE (Conformité Européenne) directives, Compumotor has taken the initiative to provide its customers with easy to integrate motion control products that meet global requirements.

The following constitutes what is typically required to install the Gemini drives into a CE compliant system. Additional installation measures may be required at some locations. The machine builder has ultimate responsibility for machine compliance.

Low Voltage Directive (LVD) Installation Requirements:

- Mains fuses
- Drive safety earth conductor
- Motor safety earth (for motor voltages greater than 75 volts)
- Drive must be installed such that the hazardous live terminals (barrier strip) are not accessible under normal operation

Electromagnetic Compatibility (EMC) Installation Requirements:

- Product does not need to be placed within an enclosure
- Mains filter (see filter recommendations)
- Transient suppressors (mains surge test)
- Compumotor EMC cabling (requires no special cable preparation)
- EMC ready motor, or motor with EMC installation information
- Additional installation hardware as shown in drawings in this appendix

Additional Steps to Ensure Compliance

To meet the requirements of regulatory agencies, you must follow the installation guidelines presented below.

Mains Fuses

Instructions for installing mains fuses were presented in *Connecting AC Power* in *Chapter 2 Installation*.

EMC – Electromagnetic Compatibility Directive – 89/336/EEC

In order to meet the requirements of the Electromagnetic Compatibility Directive 89/336/EEC, the entire system must comply: motor, drive, cabling, and peripherals. The installation of the product must include the following items.

EMC Cabling

For electromagnetic compatibility, you must use Parker Compumotor CE cables.

EMC Motor

For system CE compliance, you must use an EMC-ready motor, or a motor that has demonstrated acceptable EMC performance.

NOTE: Motors may bear the CE mark. This mark indicates the motor meets the requirements of construction and safety—*not EMC compliance*.

Motors with shielded cabling or pipe thread style cabling options allow the easiest integration into machines required to bear the CE mark for EMC.

Varistors

You must install varistors or other voltage surge limiting devices in order to meet the requirements of EN61000-4-5. Place a Harris Semiconductor V275LA2Ø or equivalent varistor from line to line, and from lines to earth before the mains filter, as shown in the *EMC Installation* drawing later in this appendix.

Mains Filters

You must install a mains filter. The table below lists recommended filters for Gemini Drives.

Filter:	GT-L5	GT-L8	GT-U5	GT-U8
6EP1[1]	X		X	
10EP1[1, 3]	X	X	X	X
FN2070-10-06[2]	X	X	X	X
FN2070-12-06[2]	X	X	X	X
FN2070-16-06[2, 3]	X	X	X	X

Product with applicable mains filter denoted by “X”

[1] Corcom; [2] Schaffner;
[3] Available from Compumotor: 10 amp filter – part number 47-016140-01
16 amp filter – part number 47-017900-01

Installation Guidelines

Gemini products are made available under “Restricted Distribution” for use in the “Second Environment” as described in EN 61800-3: 1996, page 9.

Cabinet Mounting

For Electromagnetic Compatibility, cabinet mounting is not required. However, Gemini drives have high voltage terminals—for safety purposes, the drive must not be user accessible during normal operation.

Drive Mounting

The Gemini drive is designed to be mounted to an earthed metal panel. For EMC performance, mount the mains filter to the same panel, as close to the drive as possible. See the *EMC Installation* drawing at the end of this appendix.

Cable Routing

Route high power cables (motor and mains) at right angles to low power cables (communications and inputs/outputs). Never route high and low power cables parallel to each other.

Cable Shielding

All cables must maintain high integrity 360 degree shielding. Compumotor CE cables are fully shielded and provide the required screening. When you install limit switches and other inputs/outputs, you must observe proper noise immunity standards. See the *EMC Installation* drawing at the end of this appendix.

Additional Measures

Some installations may require that you take additional EMC measures. To further increase product immunity and reduce product emissions, you may add clip on ferrite absorbers to all cables. Compumotor recommends a ferrite with at least 200 ohm impedance at 100 MHz, such as:

Steward Ferrite	part number 28A2024
Fair-Rite	part number 0443164151

(These ferrites are available from Compumotor, part number 47-015956-01)

Enclosure Mounting the Gemini Drive

The enclosure must be properly earthed and paint must be removed from drive mounting and RF earth bonding locations. Proper shield termination of all cables entering and exiting the enclosure is required. The motor shield (braid) must be fastened to the bottom of the drive using the included saddle clamp. The shield must not make contact with other conductors, as this will cause common mode drive generated PWM current to flow where not expected. The shields of all other cables that enter or exit the enclosure must be RF bonded to the enclosure entrance point via R-Clamp, bulkhead clamshell clamp, or other 360° bonding technique. This ensures that no stray noise will enter or exit the enclosure. The next drawing illustrates 360° bonding techniques.

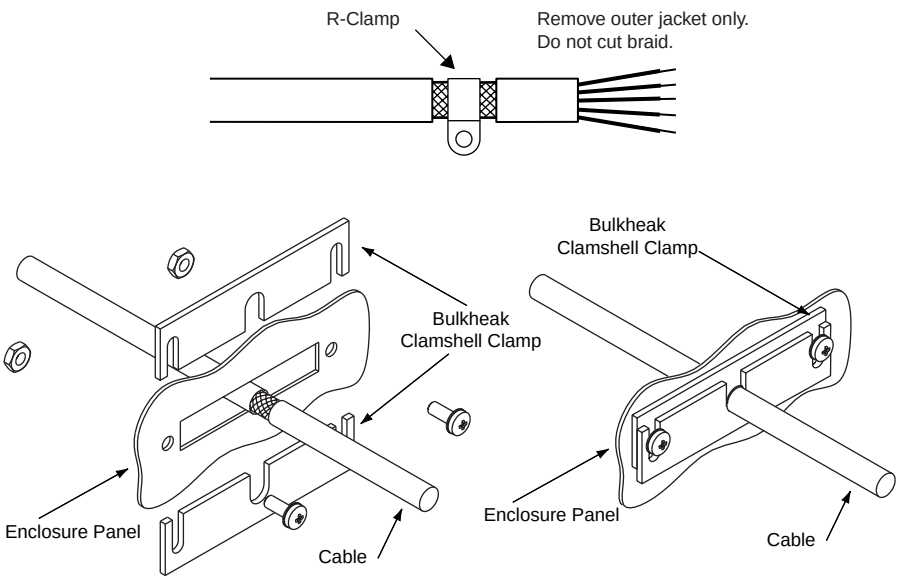

360° Bonding Techniques

The following clamps and clamp kits are available from Compumotor.

Clamp Type:	**Compumotor Part Number:**
R-Clamp	58-016050-01
R-Clamp Kit (10 per)	R CLAMP KIT
Bulkhead Clamshell Clamp	53-016131-01
Clamshell Clamp Kit (2 per)	CLAMSHELL KIT
Saddle Clamp	53-017355-01

If you use the GEM-VM50 or other screw terminal cable breakout device, be sure to properly enclose all exposed conductors to avoid contamination and to reduce the risk of electrostatic discharge. Limit switches and other I/O must utilize high quality shielded cabling (85% braid coverage minimum), which must be RF earth bonded as shown above.

Panel Mounting the Gemini Drive

The mounting panel must be properly earthed and paint must be removed from drive mounting locations. Gemini CE cables maintain proper RF bonding with the drive when you insert them in the correct location and tighten the headshell jackscrews. You must fasten the motor shield (braid) to the bottom of the drive, using the included saddle clamp. The shield must not make contact with other conductors, as this will cause common mode drive generated PWM current to flow where not expected.

If you use the GEM-VM50 or other screw terminal cable breakout device, be sure to properly enclose all exposed conductors to avoid contamination and to reduce the risk of electrostatic discharge. Limit switches and other I/O must utilize high quality shielded cabling (85% braid coverage minimum), which must be RF earth bonded as shown in the *360° Bonding Techniques* drawing.

System Installation

The next figure shows a typical EMC installation.

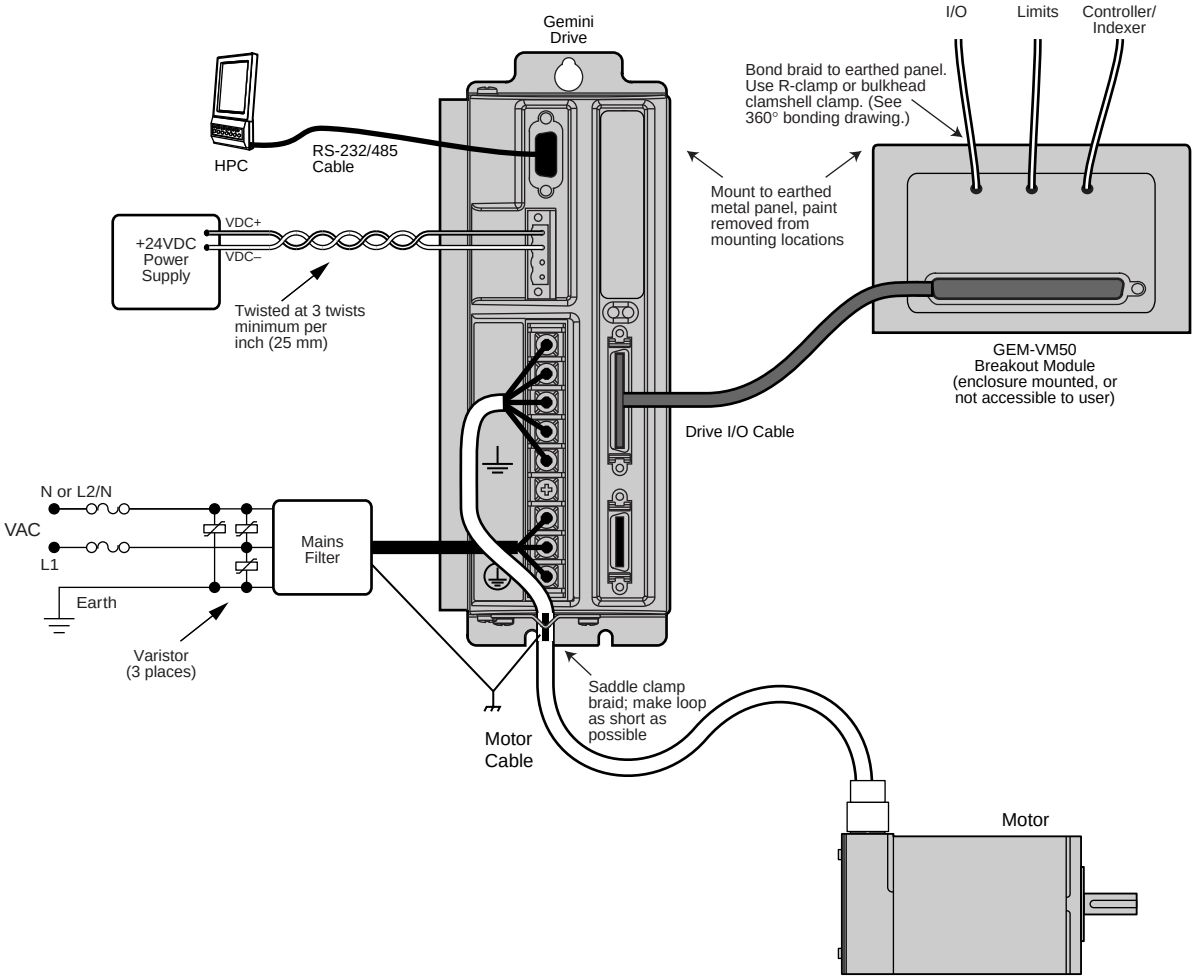

EMC Installation

If you mount the Gemini drive in an enclosure, terminate cable braids (screens) at the entrance of the enclosure. However, the motor braid *must* be returned to the drive's saddle clamp, not any other location.

Index

Symbols

+24VDC keep alive power 34, 50
+24VDC power input 35
±10V command inputs 53
360° bonding 79
4-lead motor wiring 69
50 pin breakout module 65
50 pin Drive I/O connector 52
6-lead motor wiring 69
6200 connections 63
6K Controller 20
8-lead motor wiring 70

A

ABS damping 27
AC input voltage 50
AC power
  connections 16
  specifications 50
accessories 12
accuracy 51
active damping 27
advanced feature configuration 27
analog monitor 57
AT6n00 connections 63
auto standby 51
autorun mode 47
axis status 44

B

balance (phase balance) 30
bipolar rating 73
bonding 79
brake 34
breakout module 65

C

cabinet mounting 78
cable
  specifications 63
  troubleshooting 46
CE 4, 52, 76
CE Marking Directive 4
CNTRL-P 55
color code 64
COM port 45
command input 53
communications 51
Compumotor 6200 63
Compumotor AT6n00 63
configuration 18, 24
configuration status 44
connector
  Drive I/O 52
controller connections 20
cUL 52, 76
current
  bipolar rating 73
  unipolar rating 72, 73
current selection
  non-Compumotor motors 72, 73

D

damping configuration 27
descriptions 8
digital inputs 55
digital outputs 56
dimensions 58
download procedures 40
drive configuration 18, 24
drive dimensions 58
Drive I/O connector 52

E

electromagnetic compatibility 76
electronic viscosity 27
EMC 52, 76
EMC installation 80
enable input 54
enclosure mounting 78
encoderless stall detect 29
environmental specifications 51
error log 43
EV (electronic viscosity) 27
express setup 12

F

fault input 55
fault output 56
filters 77
firmware 40
flying lead cable 63
fuse information 16

G

GC-50 50 pin connector 65
GEM-VM50 65

H

humidity 51
hysteresis 51

I

I/O
  connector 52
  pinouts 52
INDEB 55
indexer connections 20
INLVL 55
input voltage 50
inputs 52, 55
inrush current 61

K

keep alive power 34, 50

L

LEDs 42
limit input 55
limit output 56
loop back test 46
Low Voltage Directive 4
LVD 4, 52, 76

M

mains filter 77
mains fuses 77
modem cable 65
Motion Planner 24
motor
  brake 34
  connections 15
  parameter table 68
  requirements 68
motor matching 30
mounting 60, 79
multiple drives 35

N

naming system 9
non-Compumotor motor 68
null modem cable
  troubleshooting 46
null-modem cable 65
numbering system 9

O

offset 30
operating system 40
options 12
output power 50
outputs 52, 56
overtemperature limits 61

P

panel mounting 60, 79
part numbering system 9
performance 51
phase balance 30
phase offset 30
Pocket Motion Planner 24
position error 56
power connections 16
product names 9
protective circuits 61
pulse inputs 53

R

regeneration 62
regulatory agencies 76
relay 34
repeatability 51
reset input 54
resolution 51
RS-232 daisy chain 38, 46
RS-232/485
  troubleshooting 45
RS-232/485 communications 36
RS-485 communications 39
RS-485 multi-drop 40

S

serial port 37
ship kit 12
shock 51
short circuit protection 61
software commands 43
software for configuration 18
specifications 50
stall detect 29
standards 52
step and direction 53, 56
step/direction command cable 63

T

TAS 43
TASX 44
TCS 44
temperature 51
temperature limits 61
TERRLG 43
troubleshooting 42
tuning 30

U

UL 52, 76
undervoltage protection 62
unipolar rating 72
update procedures 40
upload 40

V

varistors 77
vibration 51
VINref 54
VM50 65

W

waveform
  configuration 30
  specifications 51

Gemini GT Stepper Drive

RS-232/485 Connector – Configuration Port: see page 36

To configure all drive parameters, connect a PC or HPC to this port. Use Motion Planner or Pocket Motion Planner for drive configuration.

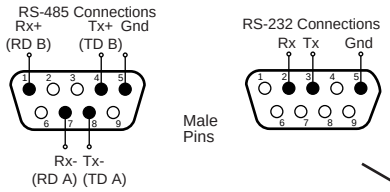

LEDs – see page 42

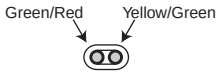

LED Color:

Left	Right	Indicated State
Off	Yel	Initialization
Red (flash)	Off	Awaiting flash download
Grn (flash)	Yel (flash)	Programming flash memory
Red	Grn	Keep alive mode
Grn	Grn (flash)	Incoming steps (variable rate)
Grn	Yel/Grn (flash)	Autorun mode
Red	Off	Drive not enabled Drive faulted
Grn	Off	Drive ready

+24VDC/Relay Connector – see page 34

+24VDC provides keep alive power to drive

When drive is enabled, it holds relay closed.

Relay rating: 5A at 24VDC or 120VAC.

If drive is faulted or disabled, relay will open. (Typical use: control of motor brake.)

Motor Output Connections – see page 15

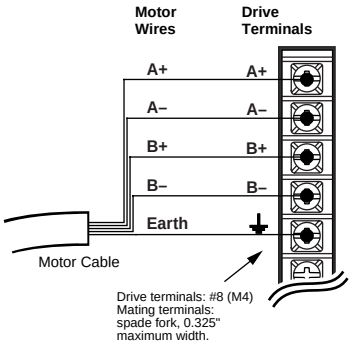

50 Pin DRIVEI/O Connector – see page 52

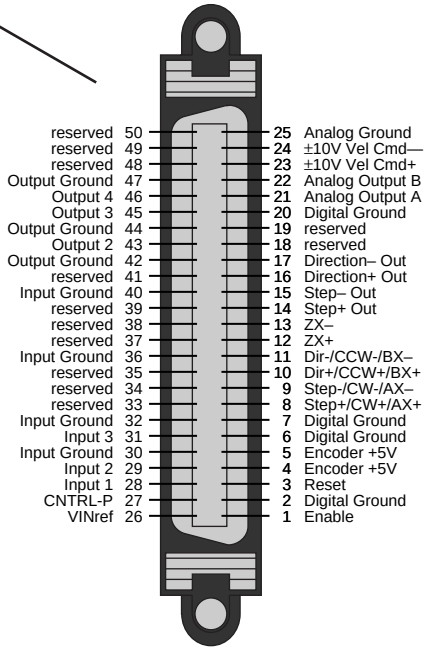

AC Input Connections– see page 16

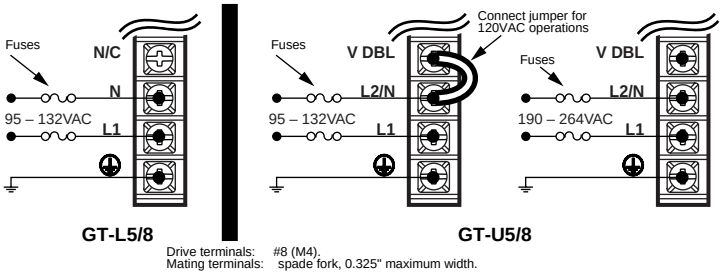

Protective Circuits – see page 61

Short Circuit Protection
Inrush Current Protection
Drive Overtemperature Protection
Undervoltage Protection
Regeneration Protection

Environmental Specifications – see page 51

Operating Temperature	Still Air:	45°C (113°F)
	Moving Air:	50°C (122°F)
	Minimum:	0°C (32°F)
Storage Temperature:		-40°C – 85°C (-40°F – 185°F)
Humidity:		0 – 95%, non-condensing

Troubleshooting – see page 41

Commonly used status commands (binary status bits are numbered 1 to n, from left to right):

TERRLG	Error log reports the last 10 error conditions (cleared with CERRLG).
TAS	General report, including fault conditions.
TASX	Additional report of conditions not covered with TAS.
TCS	If TASX bit #7 or bit #28 is set, you can identify the cause with TCS.
TINO	Bit #6 indicates status of Enable input ("1" = OK to enable drive).
TIN	Status of digital inputs, including end-of-travel inputs.
TOUT	Status of digital outputs.

You must configure all motor parameters. Be sure to follow the drive configuration procedure (see *Chapter 2 Installation*).

Any fault condition causes the drive to shut down.

The drive can not be enabled (DRIVE1) unless the Enable input is grounded and the Reset input is not grounded.

Use one of three methods to reset the drive (all command settings are remembered after reset):

Issue the RESET command.
Momentarily close the Reset input.
Cycle power to the drive.